A dynamic capability approach to sustainable supply chains: an investigation of agility and resilience in the Australian manufacturing sector

by

Samudi Tharangika Perera

B.Sc. (Industrial Management), M.MM

A thesis submitted in fulfilment of the requirements for the degree of

Doctor of Philosophy

School of Management

UniSA Business School



University of
South Australia

August 2016

Contents

List of Figures vii
List of Tables viii
List of Acronyms and Abbreviations ix
Summary x
Declaration xii
Acknowledgements xiii
Publications xv
Chapter 1 Introduction 1
1.1 Introduction 1
1.2 Research background 1
1.3 The research context of the Australian manufacturing sector 3
1.4 Research question and aims 4
1.5 Research methodology 4
1.6 Key research findings 5
1.7 Significance of the study 6
1.8 Ethical considerations 7
1.9 Research scope 7
1.10 Thesis structure 8
1.11 Chapter summary 9
Chapter 2 Sustainable, agile and resilient supply chains: a literature review 10
2.1 Introduction 10
2.2 Supply chains and supply chain management 10
2.3 Sustainable supply chains 12
2.3.1 Sustainability 13
2.3.2 Sustainability in supply chains 15
2.3.3 Sustainable practices in supply chains 17
2.3.3.1 Social sustainability practices 17
2.3.3.2 Environmental sustainability practices 23
2.3.3.3 Economic sustainability in supply chains 30
2.3.4 Developing a sustainable supply chain 33
2.4 Agile supply chains 35
2.4.1 Overview of the concept of agility 35

2.4.2 Supply chain agility 36
2.4.3 Attributes of supply chain agility 37
2.5 Supply chain resilience 39
2.5.1 The concept of supply chain resilience 39
2.5.2 Attributes of resilient supply chains 41
2.6 Applicable theories 43
2.6.1 Dynamic capability perspective 43
2.6.2 Dynamic capabilities, agility and resilience in supply chains 47
2.6.3 Social capital 50
2.7 Gaps in the literature 53
2.8 Topics covered in the study 54
2.9 Chapter summary 56
Chapter 3 Theoretical framework and hypotheses 58
3.1 Introduction 58
3.2 Focus of research 58
3.3 Research questions 59
3.4 The manufacturing sector in Australia 59
3.5 The theoretical framework 62
3.6 Development of hypotheses 65
3.6.1 Agility 65
3.6.2 Resilience 70
3.6.3 Agility and resilience 74
3.6.4 Environmental sustainability and social sustainability 76
3.6.5 Social sustainability and economic sustainability 78
3.6.6 Environmental sustainability and economic sustainability 78
3.7 Chapter summary 79
Chapter 4 Methodology 82
4.1 Introduction 82
4.2 Research design 82
4.3 Qualitative phase 84
4.3.1 Population and sampling 84
4.3.2 Interview protocol and pilot testing 85
4.3.3 Arranging and conducting interviews 87
4.3.4 Analysing qualitative data 88

4.3.5 Trustworthiness 89
4.4 Quantitative phase 90
4.4.1 Data collection 91
4.4.2 Scale development 91
4.4.2.1 Specifying the domain of constructs to be measured 92
4.4.2.2 Item generation 92
4.4.2.3 Determining the format for measurement 94
4.4.2.4 Expert review of items 95
4.4.3 Questionnaire design 98
4.4.3.1 Pilot study 99
4.4.3.2 Cleaning the measures 100
4.4.4 Survey 100
4.4.4.1 Sample design 100
4.4.4.2 Key informants 102
4.4.4.3 Questionnaire distribution 102
4.4.4.4 Response rate 102
4.4.4.5 Non-response bias 102
4.4.5 Quantitative data analysis 103
4.4.5.1 Preliminary analysis 103
4.4.5.2 Statistical analysis 106
4.5 Chapter summary 117
Chapter 5 Qualitative research findings 119
5.1 Introduction 119
5.2 Profile of the firms 119
5.3 Supply chain agility 124
5.3.1. Identifying changes 124
5.3.1.1 Demand changes 124
5.3.1.2 Supply changes 125
5.3.1.3 Changes of a strategic nature 126
5.3.2 Adopting various sources of information about changes 128
5.3.3 Responding to changes in a timely manner 130
5.3.4 Embedding flexibility into operations 132
5.4 Supply chain resilience 135
5.4.1 Withstanding sudden changes 135

5.4.2 Joint planning to overcome disruptions 137
5.4.3 Minimising disruptive events 139
5.5 Social sustainability 141
5.5.1 Ensuring employee welfare 142
5.5.1.1 Improving workplace health and safety 142
5.5.1.2 Developing employee skills 143
5.5.1.3 Ensuring employee rights 143
5.5.1.4 Enhancing employee social welfare 144
5.5.2 Engaging in ethical business conduct 146
5.5.3 Assuring external welfare 147
5.5.4 Maintaining social sustainability in supply chains 149
5.5.4.1 Embedding social sustainability as a selection criterion 149
5.5.4.2 Visiting suppliers' sites 151
5.6 Environmental sustainability 154
5.6.1 Developing environmentally friendly products 154
5.6.1.1 Environmentally friendly sourcing 154
5.6.1.2 Designing environmentally friendly products 155
5.6.2 Preserving natural resources 157
5.6.3 Adopting environmental management systems 159
5.6.4 Maintaining environmental sustainability in the supply chain 160
5.7 Economic sustainability 163
5.7.1 Improving financial performance 164
5.7.2 Investing opportunities 165
5.7.3 Expanding markets 166
5.8 Association between the three sustainability dimensions 167
5.9 Chapter summary 170
Chapter 6 Quantitative research findings 174
6.1 Introduction 174
6.2 Preliminary analyses 174
6.2.1 Missing values 175
6.2.2 Multivariate normality and outliers 176
6.2.3 Sample size 177
6.3 Sample characteristics 177
6.4 Descriptive statistics 180

6.5 Measurement models 182
6.5.1 Measurement model for agility 183
6.5.2 Measurement model for resilience 187
6.5.3 Measurement model for social sustainability 189
6.5.4 Measurement model for environmental sustainability 192
6.5.5 Measurement model for economic sustainability 195
6.5.6 Full measurement model 199
6.6 Assessment of the measurement model 203
6.6.1 Reliability 203
6.6.2 Validity 204
6.6.3 Common method bias 206
6.6.4 Measurement invariance 207
6.6.4.1 Manufacturing and service firms 207
6.6.4.2 Small, medium and large firms 209
6.6.4.3 Foreign-owned and Australian-owned firms 211
6.7 Structural model and hypotheses testing 212
6.8 Post-hoc analysis 215
6.9 Chapter summary 218
Chapter 7 Discussion **219**
7.1 Introduction 219
7.2 Agility and resilience 220
7.3 Resilience and social sustainability 222
7.4 Resilience and environmental sustainability 224
7.5 Environmental sustainability and social sustainability 226
7.6 Mediation effects 227
7.7 Trade-offs for sustainability 228
7.8 Chapter summary 229
Chapter 8 Conclusions and recommendations **230**
8.1 Introduction 230
8.2 Theoretical implications 230
8.3 Practical implications 232
8.3.1 For managers 233
8.3.1.1 To improve agility 233
8.3.1.2 To improve resilience 234

8.3.1.3 To improve sustainability 235
8.3.2 For industry associations 236
8.3.3 For government departments and agencies 239
8.4 Limitations of the research 242
8.5 Future research directions 243
8.6 Conclusion 244
References 247
Appendix A Ethics approval 287
Appendix B Invitation letter used to recruit participants for interviews 289
Appendix C E-mail invitation to survey participants 291
Appendix D Information sheet for interviewees 293
Appendix E Information sheet for survey participants 297
Appendix F Interview protocol 301
Appendix G Consent form for the interviewees 303
Appendix H Questionnaire 305
Appendix I Coding framework 316
Appendix J Sample of the inter-rater reliability test results 319
Appendix K Description of the sample of the firms interviewed 320

List of Figures

Figure 2.1 Sustainability: triple bottom line 14

Figure 3.1 Theoretical framework linking agility, resilience and sustainability in firms in the supply chain 63

Figure 5.1 The themes for supply chain agility 134

Figure 5.2 The themes of supply chain resilience 141

Figure 5.3 The themes for social sustainability 153

Figure 5.4 The themes of environmental sustainability 163

Figure 5.5 The themes for economic sustainability 167

Figure 6.1 Scree plot for agility 184

Figure 6.2 Measurement model for agility 186

Figure 6.3 Scree plot for resilience 187

Figure 6.4 Measurement model for resilience 188

Figure 6.5 Scree plot for social sustainability 190

Figure 6.6 Measurement model for social sustainability 192

Figure 6.7 Scree plot for environmental sustainability 193

Figure 6.8 Measurement model for environmental sustainability 194

Figure 6.9 Scree plot for economic sustainability 196

Figure 6.10 Measurement model for economic sustainability 198

Figure 6.11 Full measurement model 201

Figure 6.12 Structural model 213

Figure 6.13 Structural model with estimated path coefficients and hypotheses 214

List of Tables

Table 2.1 Summary of the topics covered in the study 54
Table 3.1 Summary of hypotheses and their relationships to the research questions 81
Table 4.1 Manufacturing industries and sample distribution of the interviewed firms 85
Table 4.2 Scale development process 92
Table 4.3 Measurement scale items 97
Table 4.4 Reliability coefficients for measurement scales 100
Table 4.5 Codes and titles of divisions in the ANZSIC 2006 classification 101
Table 4.6 Absolute, incremental and parsimonious model fit indices 115
Table 5.1 Profile of the firms interviewed 121
Table 5.2 Key points of the findings in the qualitative phase 172
Table 6.1 Profile of surveyed firms used in analysis 178
Table 6.2 Descriptive statistics of the sample 181
Table 6.3 Model fit indices and the criteria used in the study 183
Table 6.4 Factor analysis of agility items 186
Table 6.5 Factor analysis of resilient items 189
Table 6.6 Factor analysis of social sustainability items 192
Table 6.7 Factor analysis of environmental sustainability items 195
Table 6.8 Factor analysis of economic sustainability items 198
Table 6.9 Results of the full measurement model 202
Table 6.10 Correlation table 203
Table 6.11 Sample calculation of AVE for agility 205
Table 6.12 Convergent and discriminant validity 205
Table 6.13 Nested model comparisons for discriminant validity 206
Table 6.14 χ^2 values of the constrained and unconstrained models for metric invariance for respondents from manufacturing and service firms 209
Table 6.15 Results of configural invariance for the sample based on firm size 210
Table 6.16 Results of metric invariance based on firm size 210
Table 6.17 Results of configural invariance based on ownership 211
Table 6.18 Results of metric invariance based on ownership 212
Table 6.19 Results of the structural analysis 215
Table 6.20 Bootstrapping results for mediation 217

List of Acronyms and Abbreviations

ABS	Australian Bureau of Statistics
AGFI	Adjusted Goodness-of-Fit
AIC	Akaike Information Criterion
AIDS	Acquired Immune Deficiency Syndrome
ANZSIC	Australian and New Zealand Standard Industrial Classification
AVE	Average Variance Extracted
CFA	Confirmatory Factor Analysis
CFI	Comparative Fit Index
CSIRO	Commonwealth Scientific and Industrial Research Organisation
CSR	Corporate Social Responsibility
EFA	Exploratory Factor Analysis
EM	Expectation Maximisation
EPA	Environment Protection Authority
GFI	Goodness-of-Fit Index
GRI	Global Reporting Initiative
IEM	Internal Environmental Management
ILO	International Labour Organisation
ISO	International Organisation for Standardisation
KMO	Kaiser-Meyer-Olkin
MAR	Missing at Random
MCAR	Missing Completely At Random
MI	Multiple Imputation
ML	Maximum Likelihood
MNAR	Missing Not At Random or Non-Ignorable
NFI	Normed Fit Index
NGOs	Non-Government Organisations
NNFI	Non-Normed Fit Index
OECD	Organisation for Economic Co-Operation and Development
OH&S	Occupational Health and Safety
PAF	Principal Axis Factoring
RMSEA	Root Mean Square of Approximation
SCM	Supply Chain Management
SEDEX	Supplier Ethical Data Exchange
SEM	Structural Equation Modelling
SFL	Standardised Factor Loadings
SMC	Squared Multiple Correlation
SRMR	Standardised Root Mean Square Residual
TBL	Triple Bottom Line
TF	Totally Free
TLI	Tucker-Lewis Index
WCED	World Commission on Environment and Development
χ^2	Chi-Square

Summary

Sustainability in supply chains is increasingly becoming a major consideration in businesses due to the increasing demand for socially and environmentally responsible practices. The topic of sustainable supply chain management in the literature is nascent and provides scope to explore the dynamic capability perspective for firms to succeed in today's economic conditions. Market characteristics such as frequent changes in demand and supply and unexpected disruptions have established the need for agility and resilience as dynamic capabilities. Discussion, however, of how these capabilities could foster socially and environmentally sustainable practices is still rare in the supply chain management literature and worthy of further investigation.

This research examines the effect of agility and resilience on sustainability in manufacturing supply chains in Australia. Such an examination is timely for the manufacturing sector because agility, resilience and sustainability have been accorded high priority in government agendas. This study aims to understand the agile and resilient characteristics and sustainability practices in supply chains of Australian manufacturing firms. Underpinned by the dynamic capability view and social capital theory, a framework is developed to explain how these capabilities influence the diffusion of sustainability (namely social, environmental and economic) practices along the supply chain.

A mixed methods approach was adopted. First, a qualitative study using 31 interviews was conducted with manufacturing firms as focal firms in the chain. This phase identified the characteristics of agility, resilience and sustainability practices used in their supply chains. These findings were used to confirm the scale items of a survey used in the next stage. The quantitative study adopted an online survey to investigate the relationship of agility and resilience with sustainability. Survey responses represented 200 firms at various stages of the manufacturing supply chain. Data were analysed using structural equation modelling.

The findings showed that flexibility and responsiveness are vital features of agility while prevention strategies are predominant for resilience. The results confirmed that resilience influences social and environmental practices. Agility, however, has no direct impact on sustainability efforts but was found to be a precursor for resilience. The results indicate that the majority of firms in the sample engage in social and

environmental sustainability practices as a preventive strategy and in response to supply chain disruptions.

The study provides both theoretical contributions to the field, and practical implications for industry bodies, government departments and agencies in Australia. The findings provide valuable lessons for supply chain managers in Australian firms in manufacturing supply chains for determining appropriate strategies and competencies to improve their performance and overall sustainability in the supply chain. Firms need to identify market changes, resource requirements and develop capabilities not only at the firm level but also at the supply chain level, where agility and resilience factors are important for sustainable development in the supply chains. While economic outcomes are the desired goal of most businesses, market competitiveness and long-term survival in Australia's manufacturing sector warrants sustainability efforts at the supply chain level.

Declaration

This thesis presents work carried out by myself and does not incorporate without acknowledgment any material previously submitted for a degree or diploma in any university; to the best of my knowledge it does not contain any material previously published or written by another person except where due reference is made in the text; and all substantive contributions by others to the work presented, including jointly authored publications, are clearly acknowledged.



Samudi Tharangika Perera 21 August 2016

Acknowledgments

This PhD journey would not have been completed without the support of many people and organisations. I take this opportunity to express my sincere gratitude to all of them.

First and foremost, my heartfelt gratitude goes to the principal supervisor, Associate Professor Claudine Soosay for her intellectual support and inspiration throughout the period. Her guidance, timely and constructive feedback and moral support encouraged me to complete this journey. I express my gratitude to my co-supervisor, Dr Sukhbir Sandhu who was always ready to offer a helping hand whenever I needed it. Thank you very much to both of you for the encouragement, enthusiasm and dedication you showed me during this period.

I would also like to thank the University of South Australia research committee and the School of Management for granting me a scholarship to pursue the PhD. I am also obliged to the people and associations that helped me to collect data. Many thanks go to Peter McInnes, Director, Executive Partners Programme of the School of Management and other executive partners, former chair, Peter Crossman of the Strategic Partnerships Programme of the University of South Australia Business School, Professor Peter Murphy at Future Industries Institute, Mawson Lakes Campus, Phil Stump, Northern Adelaide manufacturing development officer at Polaris Centre, Giovanni Ferrante at the Chartered Institute of Purchasing and Supply (CIPS) Australia, Neville Binning and Hanna Lucas of the Chartered Institute of Logistics and Transport in Australia (CILTA), Michael McCarthy at South Australian Freight Council Inc., Maryanne Doherty at the Australian Production and Inventory Control Society Limited (APICS), John Chapman, the Small Business Commissioner, South Australia and the senior business support officer, Davies Rosanne, Frank de Klerk at Supply Chain and Logistics Association of Australia, Ira Holbrook at National Association of Women in Operations, Nerida Keltor at Queensland Supply Chain Logistics Conference and Sally de Swart at Reed Exhibitions for their immense support during the data collection. And also many thanks to those who participated in pilot interviews, interviews and survey.

I deeply appreciate Professor Martin Christopher, for his valuable insights into this study during his visit to the University of South Australia in 2014. I also appreciate the assistance provided by Prof. Larry Williams and Dr Chris Nye of the Consortium for the

Advancement of Research Methods and Analysis (CARMA) for their advice on data analysis.

It is a pleasure to mention Dr Monica Beherend for her kind assistance and for the wonderful companionship throughout this journey. Her thoughtful suggestions made research writing interesting. Thanks also to Dr Wendy Bastalich for her assistance in research writing. I would like to express my appreciation to the staff of the School of Management for the support they provide on administrative matters and to the library staff for their prompt reactions to queries. I am grateful to Pauline, Julie, Qwenith and Ted for devoting their personal time for reading and correcting my initial drafts.

I was fortunate to receive the support from my other colleagues during this endeavour. Thank you very much Upekha: because of you I was able to adapt easily to university life and you were always there with me in my difficulties. Many thanks go to Ashok Manoharan, Abou Bakar, Craig Lee and Hailian Guo and for their support at many stages in my PhD. I am also indebted to the colleagues who shared the work space with me, for making it a pleasant environment with their supportive thoughts and friendship.

I would also like to express my gratitude to Sri Lankan friends in Adelaide whose companionship helped my family to set up things here more easily. We never felt lonely because of you. Many thanks also to Seni for being the best buddy for Tharuki, my daughter, especially during the initial period.

Finally, my heartfelt gratitude goes to my mother, father and sister. Even though we were thousands of miles apart, their faith and blessings were always there with me during all the ups and downs in my life. I am indebted to my husband, for his unconditional support and love during this whole journey. He had to sacrifice many things to help me reach my goal. My adorable daughter, Tharuki underwent major milestones in her life during this period. She started kindergarten and entered school. As a kid, she offered her fullest support to complete my studies. Last year, for mother's day, she gave me three work organisers and requested me to complete the PhD as soon as possible by planning with her gifts. I was working on the final chapters during her summer vacation. She brought everything to my work desk at home. Her only request was 'Amma [mum], please complete your PhD soon, I want to play with you'. Thank you very much for your patience Tharuki. Now it's your playtime.

Publications

Perera, S., Soosay, C., Sandhu, S. 2014, 'Does agility foster sustainability? Development of a framework from a supply chain perspective', in T Osen & A Zhang (eds), *Refereed proceedings of the 12th ANZAM Operations, Supply Chain, and Services Management Symposium*, July 3-4, The University of Auckland Business School, Auckland, New Zealand.

Perera, S., Soosay, C., Sandhu, S. 2015, 'Strategies for agility in supply chains: a study of Australian manufacturers', *Refereed proceedings of the 13th ANZAM Operations, Supply Chain and Services Management Symposium*, May 31-June 2, College of Business, RMIT, Melbourne.

Perera, S, Sandhu, S & Soosay, C 2017, 'Investigating the impact of agility and resilience on sustainable supply chains', *To be presented at the 77th Annual Meeting of the Academy of Management*, August 4-8, Atlanta, Georgia, United States.

1 Introduction

1.1 Introduction

The purpose of this study is to examine the influence of supply chain agility and resilience on sustainability in supply chains in the manufacturing sector. Managing supply chains is increasingly challenging, yet it is imperative for firm competitiveness (Christopher 2011; Christopher & Holweg 2011). In order to remain competitive in dynamic and uncertain markets, supply chains increasingly need to respond to market changes while also being socially, environmentally and economically sustainable. This chapter starts with background information about the research problem and shows the connection between supply chain agility and resilience for sustainable supply chains. It describes the research context (manufacturing sector in Australia) and shows the appropriateness of this research in that context. Following this, the chapter provides a brief discussion of the research procedure and highlights the research findings, significance of the study, ethical considerations and the research scope. The chapter concludes by outlining the subsequent chapters of the thesis.

1.2 Research background

Sustainable supply chain management is an emerging area for research (Ashby, Leat & Hudson-Smith 2012; Pagell & Shevchenko 2014). Past events have demonstrated the relevance of incorporating sustainability into the supply chain decision-making process. To illustrate this point using two corporations as examples, Nike was accused of using child labour in the industrial unit of one of its suppliers (Maloni & Brown 2006), while Nestlé was confronted with a scandal regarding rainforest depletion caused by its palm oil suppliers (Ionescu-Somers & Enders 2012). These incidents had devastating impacts on these firms and led to the incorporation of ethical and environmental issues both within their internal operations and in their supply chain partners (Ashby, Leat & Hudson-Smith 2012; Seuring & Müller 2008a).

In order to address concerns such as these, firms started implementing practices that would ensure sustainability both within the firm and in the supply chain. Sustainability considerations are embedded into processes such as purchasing, manufacturing, new product development and transportation (Hassini, Surti & Searcy 2012). A challenge to embedding sustainability-related practices into these processes is that various stakeholders have different sustainability interests and their influence differs based on the supply chain decision area. Also, Meixell and Luoma (2015) found that the media is highly influential in sustainability oriented purchasing decisions and that shareholders are influential in sustainable logistics decisions. Another challenge is that firms need to comply with the sustainability requirements of the markets they serve. For instance, European Commission legislation on product recovery at the end of a product's life cycle requires manufacturers to incorporate sustainable recovery solutions into production processes and supply chain processes (Erol et al. 2010; Zhu, Sarkis & Lai 2013).

The diverse and changing stakeholder needs for sustainability highlight the significance of dynamic capabilities in firms to incorporate sustainability into their internal and external practices. According to Pagell and Shevchenko (2014), sustainable supply chain studies have largely focused on supply chain practices. However, a few studies have investigated capabilities that help firms towards sustainability (e.g., Beske 2012; Beske, Land & Seuring 2014; Hofmann, Theyel & Wood 2012). Dynamic capabilities refer to a firm's ability to integrate, build and reconfigure internal and external resources and competencies to address changing environments (Teece, Pisano & Shuen 1997). Agility and resilience are vital dynamic capabilities that drive supply chain competitiveness in uncertain environments (Blome, Schoenherr & Rexhausen 2013; Gligor, Esmark & Holcomb 2015, Golgeci & Ponomarov 2013; Jüttner & Maklan 2011; Ponomarov & Holcomb 2009).

Supply chain agility is the ability of a firm to adjust its operations and supply chain practices to address changing market needs (Blome, Schoenherr & Rexhausen 2013; Braunscheidel & Suresh 2009). Supply chain resilience is the ability of a firm to withstand and recover from unexpected disruptions in supply chains (Nils-Ole et al. 2015; Pettit, Croxton & Fiksel 2013). Resilience enables firms to anticipate and recover from disruptions, mitigate damage and progress to a more desirable market position.

This study examines the impacts of agility and resilience on social, environmental and economic sustainability in the Australian manufacturing supply chains.

1.3 The research context of the Australian manufacturing sector

According to the Australian and New Zealand Standard Industrial Classification (ANZSIC), manufacturing is the conversion of materials, substances or components, either physically or chemically, into new products (Australian Bureau of Statistics (ABS) 2016a). These input materials are products from agriculture, forestry, fishing and mining industries or from other manufacturing entities. Manufacturing includes diverse industries ranging from consumables (such as food, furniture and textiles), commodities (such as metals, minerals or petroleum) and capital products (such as machinery and transport equipment) (ABS 2016a).

The major challenges to the manufacturing sector today are globalisation, increasing exchange rates, poor domestic demand, a shortage of skilled employees and increasing production cost (Office of the Chief Economist 2015). High labour, transportation and energy costs have resulted in lower productivity, thereby diminishing the strength of Australian firms in global markets (Commonwealth of Australia 2014; Deloitte 2014; Manufacturing Australia 2015). This situation has led to the Australian manufacturing sector facing declining competitiveness over the period, despite the recent progress when Australia's manufacturing competitiveness index moved from 18 in 2015 to 17 in 2016, according to the *International Institute for Management Development (IMD) World Competitiveness Yearbook 2016* (IMD 2016).

Australia is also lagging behind in sustainability performance when compared to other developed countries (CSIRO Future Manufacturing Flagship Sustainable Manufacturing Initiative 2012). Moreover, the landfill rate and the per capita greenhouse gas emissions are higher than in other Organisation for Economic Co-operation and Development (OECD) countries (National Sustainability Council 2013). In order to remedy this situation, more emphasis should be placed on developing sustainable manufacturing supply chains. Given this background, it is timely to examine how agile and resilient capabilities are instrumental in developing sustainable supply chains to maintain the long-term viability of the manufacturing sector in Australia.

1.4 Research question and aims

The aim of this research is to examine the influence of supply chain agility and resilience on sustainability in supply chains in the manufacturing sector. The central overarching research question is:

How do agility and resilience affect the sustainability of firms in the supply chain in the Australian manufacturing sector?

To answer this research question, three sub-questions are developed as follows:

1. What are the attributes of supply chain agility and resilience in firms in the Australian manufacturing sector?
2. What sustainability practices are present in firms in the Australian manufacturing sector?
3. What are the impacts of agility and resilience on the three dimensions of sustainability (social, environmental and economic) in firms in the supply chain in the Australian manufacturing sector?

1.5 Research methodology

This research has adopted a mixed methods approach to address the research questions. Accordingly, the study was carried out in two phases in which the qualitative study precedes the quantitative study. First, an extensive literature review was conducted for an in-depth understanding of the characteristics of agile, resilient and sustainable supply chains. This also helped to identify the research gaps and provided insights for developing the conceptual framework.

The next step focused on collecting primary data specifically for the study. This stage had two phases. During Phase 1, semi-structured interviews were conducted with managers from 31 organisations covering a variety of industries in the Australian manufacturing sector. The interviews were conducted with the manager in-charge of the supply chain operation or with an employee who was knowledgeable about the supply chain operations of the organisation. The interviews were guided by an interview protocol that had been refined through conducting three pilot interviews. Phase 1 addressed the first two research questions and also helped verify the scale items used in Phase 2.

Phase 2 was a quantitative study that employed a survey questionnaire. The survey instrument was based on the practices of agile, resilient and sustainable supply chains. The scales were adopted from previous studies and modified to suit the Australian context. The instrument was refined and improved through conducting 13 pilot surveys before launching the survey. The questionnaires were distributed to participants who represented a number of stages in the manufacturing supply chain in Australia. The target participants were supply chain managers or those most knowledgeable about their organisation's supply chain.

Data collected in Phase 1 were analysed using a thematic analysis. A thematic analysis helps to identify major topics arising from the data (Bryman 2008). All the interviews were transcribed and imported into NVivo 10 software for the analysis. The use of such software increases the speed and reliability of the analysis.

The quantitative data in Phase 2 were analysed using SPSS 21 and AMOS 21. The data were initially cleaned and verified for suitability in the statistical analysis. Next, structural equation modelling was performed, following the two-step procedure recommended by Anderson and Gerbing (1988). Accordingly, the measurement model was first established and assessed for reliability and validity. Finally, the structural model which depicted the theoretical framework was analysed to confirm or reject the hypotheses proposed in this study. The theoretical framework and the associated hypotheses are discussed in detail in Chapter 3.

1.6 Key research findings

The data obtained from Phase 1 (Qualitative study) and Phase 2 (Quantitative study) provided important findings. The results of Phase 1 identified a number of agile, resilient and sustainable practices (social, environmental and economic) used by firms in the manufacturing sector in Australia. The results showed that flexibility and responsiveness are important characteristics of agility. This study also provides evidence that resilience helps firms to deal with both short- and long-term disruptions. The findings reflected that the firms with the ability to adapt and plan for changes that could happen in the long term would move towards more desirable sustainability goals. The social sustainability practices that were identified included providing employee and community welfare, conducting businesses ethically and enhancing social sustainability in supply chains. The environmental sustainability practices include reducing the

environmental impacts of products and processes, protecting natural resources, having environmental management systems and enhancing environmental sustainability in supply chains. The economic sustainability practices identified were related to improving financial and market performance, as well as investments.

In Phase 2, the theoretical framework and the hypotheses were examined. This led to establishing the impacts of supply chain agility and resilience on the sustainability of firms in the manufacturing supply chains in Australia. The findings suggested that agility influenced the resilience of the firms in the manufacturing supply chains in Australia. Furthermore, the results demonstrated positive effects of resilience in regards to the social and environmental sustainability of the firms in the manufacturing supply chains in Australia.

1.7 Significance of the study

These findings contribute, in four major ways, to the field of sustainable supply chain management. First, the study expands the perspectives of agility and resilience in supply chains into a sustainability context, incorporating the triple bottom line (social, environmental and economic). Second, the study applies a broader view of the resilience concept to sustainability, by combining a variety of perspectives found in the literature and introducing the aspect of the ability to minimise the causes that lead to long-term disruptions.

Third, in order to explore how agility and resilience affect sustainability, the study is underpinned by both the dynamic capability view and social capital theory. Even though the dynamic capability view has been widely acknowledged as being helpful in examining the development of sustainable supply chains, social capital theory has been largely ignored in this area. Drawing on the combined perspectives of these two theories helps to identify the links between agility and resilience and sustainability.

Finally, the manufacturing sector plays a pivotal role in the Australian economy. Agile, resilient and sustainable characteristics in manufacturing supply chains are instrumental in improving the competitiveness of this sector (Office of the Chief Economist 2015). This study, therefore, is timely and important for its contribution.

1.8 Ethical considerations

It is a compulsory requirement to ensure the ethical conduct of research when involving humans as research participants. Since the sample for both Phase 1 and Phase 2 consists of employees of several organisations, this study obtained the approval of the University of South Australia Ethics Committee and complies with the Human Research Ethics Policy, Australian Code for the Responsible Conduct of Research and the National Statement on Ethical Conduct in Human Research. This research was granted ethics approval on 16 September 2014 under the application number 33573 (copy provided in Appendix A).

The major ethical considerations in this research are the merit and integrity of the research, justice, respect for persons and beneficence. In order to meet these objectives, this researcher sought the informed consent of participants. The participation was voluntary and anonymous. The confidentiality of the participants and the information provided by them were assured. Prior to their participation, the participants were informed about the type of information sought, and how the data would be collected, stored and disclosed to the public. Furthermore, the participants could withdraw their participation at any stage of the study. The documents used to inform participants about the study and the invitation letters used during the participant recruitment process are attached as Appendix B, C, D and E. The participants received a summary report of the study results upon request.

1.9 Research scope

This research examined agility, resilience and sustainability from a supply chain perspective based on the Australian manufacturing supply chain context. It adopted the triple bottom line approach to sustainability to consider social, environmental and economic dimensions.

Social sustainability has different meanings at a broader level including poverty alleviation, population stabilisation, female empowerment and opportunity redistribution (Elkington, 1997). The researcher acknowledges the responsibility of the business to address these macro-level concerns. However, these aspects did not emerge from the qualitative analysis and were not included in this study.

The sample was drawn only from firms operating in Australia. Even though Australian manufacturing supply chains have offshore suppliers and customers, this study excluded them.

This study aimed to develop an understanding of the impacts of agility and resilience on sustainability. While there are geographical and market factors that could affect agility, resilience and sustainability practices, they were not considered as they go beyond the research objectives of this study. The study was conducted within this scope and was structured as explained below.

1.10 Thesis structure

This thesis is organised into eight chapters. Chapter 1 presents, in brief, the background information, research objectives and methodology. It then goes on to outline the key research findings and their significance to theory and practice. The chapter also details the ethical considerations and the research scope.

Chapter 2 reviews the literature and the theories applicable to this study. It starts with a review of the supply chain area, followed by a section focusing on sustainable practices that highlights the triple bottom line concept. Thereafter, the agile and resilient supply chain literature is considered, followed by a discussion of the dynamic capability view and the social capital theory to illustrate how these theoretical lenses underpin those concepts for sustainable supply chains. The chapter concludes by establishing the research gaps to be addressed in the study.

Chapter 3 presents the theoretical framework and hypotheses. The chapter provides an overview of the Australian manufacturing sector and explains the research questions within that context. Next, it outlines the theoretical framework and explains each hypothesis.

Chapter 4 discusses the overall design of the study and the mixed methods approach. It provides a detailed description of the two phases of the research, and discusses the sample selection and data collection procedure, before then presenting the details of the methods applied in the analysis.

Chapter 5 presents the findings of the qualitative study, organised as themes in relation to the research questions.

Chapter 6 presents the results of the quantitative analysis. Starting with the demographic information of the sample, this chapter explains the preliminary analyses of data screening and cleaning. It then depicts the results of the statistical analysis, based on the structural equation modelling technique, and provides an interpretation of the results.

Chapter 7 presents a discussion of the findings. The discussion focuses on the findings in relation to the supply chain, obtained from the quantitative phase that inquired into the impact of agility and resilience on sustainability dimensions (social, environmental and economic). The discussion is supplemented by examples from the qualitative phase of the study.

Chapter 8 presents the conclusion of this study. This chapter draws the theoretical and practical implications of the results. It also discusses the limitations of this study and concludes by recommending avenues for future studies.

1.11 Chapter summary

This chapter provided an introduction to the study and set out the aims, research questions, significance and the scope of the study. It also offered overviews of the methodology, data analysis, key findings and details of the ethical procedures followed. Finally, it outlined the content of each of the chapters in the thesis.

The chapter presented a case for examining the impacts of agility and resilience on the sustainability of firms in manufacturing supply chains in Australia, which are increasingly expected to be socially, environmentally and economically sustainable. Developing sustainable supply chains calls for dynamic capabilities, such as agility and resilience, which can lead to a more sustainable supply chain. This study also adopts the aspects of the social capital theory to develop an argument that links supply chain agility and resilience with sustainability. In order to investigate the research gaps and to justify the theoretical relevance of the study, the next chapter will review the literature in sustainable, agile and resilient supply chains, the dynamic capability view and social capital theory.

2 Sustainable, agile and resilient supply chains: a literature review

2.1 Introduction

Chapter 1 set out the objectives and research questions for this study by emphasising the significance of sustainability in supply chains for businesses and highlighting the requirement for agility and resilience to develop a sustainable supply chain. Also, it explained the relevance of the supply chain perspective and concepts of sustainability, agility and resilience for the Australian manufacturing sector. To establish the significance of this study to both theory and practice, this chapter reviews the literature in sustainable, agile and resilient supply chains.

This chapter starts by reviewing the concept of supply chains. This discussion draws attention to the need for supply chains to be more responsive to uncertain market conditions while still being sustainable. It shows the relevance of agility and resilience to address uncertain markets, as well as their appropriateness in achieving sustainability goals. Next, it reviews sustainable, agile and resilient supply chain studies. The section then reviews the theory underpinning the link between sustainable supply chains, agility and resilience. Finally, the chapter discusses the gaps evident in the literature and builds an argument for empirical investigation.

2.2 Supply chains and supply chain management

A supply chain includes all the activities of an organisation, from raw material supply to delivery of final products to consumers (Lambert & Cooper 2000). The phenomenon of supply chains, as a business approach, has been a topic of research since the 1980s (Winter & Knemeyer 2013). Economic and organisational changes that occurred during this period influenced firms to expand their focus from firm-specific functions to the roles of supply chains (Chandra & Kumar 2000; Kisperska-Moron & Swierczek 2009).

A more frequently used interpretation of the supply chain concept concerns the management of material and information flow from suppliers to customers (Braziotis et al. 2013; Melnyk et al. 2009). However, this view only considers the forward flow of material and its associated information flow. Several studies have focused on the reverse flow of products and have considered the product's return to the firm at the end of its life, or the products being recalled or returned for repairs (Christopher 2011; Erol et al. 2010; Govindan, Soleimani & Kannan 2015; Jack, Powers & Skinner 2010).

The literature focuses on activities relating to product design, meeting demand and supply uncertainties, reducing cost, managing risks and developing systems to enhance collaboration and trust among partners. This approach requires relationships among firms in creating value (Braziotis et al. 2013; Lambert, Cooper & Pagh 1998). A supply chain is, therefore, a complex system which consists of parties who are involved in the process of creating value for consumers. It includes firms from input suppliers to manufacturers, logistics providers, distributors and retailers, and extends to cover reverse logistics where products are returned back into the chain to the manufacturer, particularly at the end of the product's life. The definition of supply chain adopted in this study is:

> A set of primary collaborative activities and relationships that link companies in the value-creation process, in order to provide the final customer with the appropriate value mix of products and/or services (Braziotis et al. 2013, p. 648).

In a supply chain, firms integrate and jointly manage processes with other firms, as well as with different functional areas within the same firm (Lee, Kwon & Severance 2007). These continuous interactions among supply chain firms give rise to the supply chain management (SCM) concept. The most predominant view of SCM is integrating business processes among supply chain firms (Cooper & Ellram 1993; Cooper, Lambert & Pagh 1997; Mentzer et al. 2001). In contrast, Min and Mentzer (2004) state that SCM is a philosophy of managing a network of firms in the supply chain. Melnyk et al. (2009) proposed a systems approach to SCM, which they described as an integrated system of suppliers, firms and customers. Christopher (2011) defined SCM as:

> The management of upstream and downstream relationships with suppliers and customers in order to deliver superior customer value at less cost to the supply chain as a whole (Christopher 2011, p. 3).

The objective of SCM is to manage trade-offs among partner firms rather than maximising the interests of individual firms (Chan & Chan 2010). Managing supply

chains to achieve improved performance is a complex task with the expansion of networks and changing market conditions.

The financial crisis in 2008 provided a vantage point for the literature in supply chains as it drew attention to the vulnerability of market and economic conditions (Christopher 2012). The turbulent and uncertain market conditions require supply chains to be adaptable rather than reacting to changes (Christopher & Holweg 2011). Thus, supply chains need structural flexibility. Authors have referred to this as attaining agility (Lee 2004; Roh, Min & Hong 2011). A challenge for businesses concerns the supply chain disruptions caused by natural disasters, economic uncertainties, surges in oil prices, and terrorist attacks, to name a few events (Chopra & Sodhi 2014). Such events interrupt flows of information and resources in supply chains. Supply chains are most vulnerable when they rely on a diverse set of suppliers and customers from different geographical areas (Christopher 2011; Gunasekaran, Subramanian & Rahman 2015). In this context, resilience has gained much attention as supply chains need the ability to withstand these circumstances and return to a stable state that is equivalent or superior to the previous state after a disruption.

In addition, there has been increasing interest in developing sustainability in supply chains (Seuring & Müller 2008a; Winter & Knemeyer 2013). An emerging area of change and disruptions relates to the issue of sustainability (Hofmann et al. 2014). Various stakeholders pressure firms to be sustainable in terms of economic gains as well as social and environmental aspects. This pressure operates at both organisational and supply chain levels (Andersen & Skjoett-Larsen 2009; Fearne, Martinez & Dent 2012). The publicised instances of firms violating social or environmental issues, particularly by indirect supply chain partners, have resulted in firms tarnishing their image, in addition to disrupted operations and huge financial losses (Klassen & Vereecke 2012; Reuter et al. 2010). Sustainability is, therefore, an important issue in managing supply chains. Consequently, the literature argues that supply chains should be sustainable, agile and resilient. These concepts are reviewed in the following sections.

2.3 Sustainable supply chains

This section reviews the concept of sustainability starting from its development, especially in relation to the supply chain context. Following this, the practices of each dimension are then discussed. Finally, this section details how to develop a sustainable

supply chain while establishing a link with agility and resilience, as well as the relevant capabilities.

2.3.1 Sustainability

Reference to sustainability emerged during the 1960s with books and films that portrayed the significance of natural resources for continuation, even though the history of sustainability goes back to ancient times (Linton, Klassen & Jayaraman 2007). Sustainability received considerable attention after 1987 when the United Nations supported the movement towards sustainable development (Szolnoki 2013). In 1987, the World Commission on Environment and Development (WCED) under the United Nations submitted a report entitled *Our Common Future*, also known as the *Brundtland repor*t. The chairman of the commission was the former Prime Minister of Norway, Gro Harlem Brundtland. Both her speech and the report were landmarks in addressing issues in sustainability and sustainable development on a global scale. According to the Brundtland report, sustainability is 'meeting the needs of the present without compromising the ability of future generations to meet their own needs' (WCED 1987, p. 43).

In the management literature, the concept of sustainability initially appeared in the 1990s with an article by Gladwin, Kennelly and Krause (1995) in which they operationalised the concept into a business context (Ahi & Searcy 2013; Carter & Rogers 2008). The widely accepted explanation for sustainability applied in business is the framework developed by Elkington in 1997, which is known as the Triple Bottom Line (TBL) (Elkington 1997). This framework exhibits the dimensions and relationships of social, environmental and economic sustainability. Within this view, sustainability invokes performance in all three dimensions (see Figure 2.1). However, all the three dimensions of sustainability are not necessarily always consistent with each other, as there often are trade-offs between social, environmental and economic dimensions (Banerjee, 2011). Furthermore, political and institutional frameworks often hijack what is considered sustainable in different social-political environments (Welford, 1997). However, despite these limitations, the TBL concept of sustainability is now widely accepted (Ahi & Searcy 2013; Beske & Seuring 2014; Carter & Rogers 2008; Winter & Knemeyer 2013).

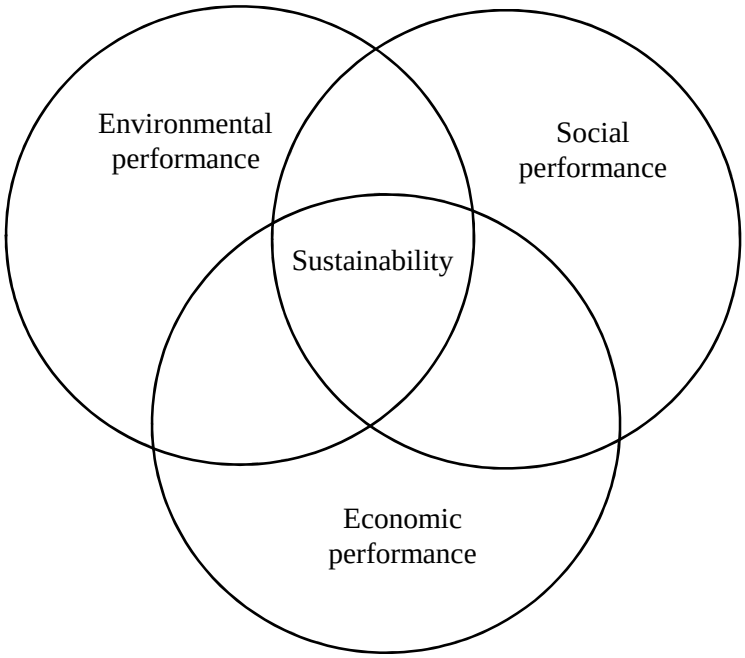

Figure 2.1 Sustainability: triple bottom line
Source: Carter and Rogers (2008, p. 365)

According to the TBL, sustainability for business means achieving economic prosperity without damaging society or destroying the environment (Carter & Rogers 2008). Pagell and Shevchenko (2014) viewed the core of sustainability as long-term survival in which businesses need to reduce negative social and environmental impacts. Consequently, all three aspects are essential for business performance. This study adopts the TBL framework and assumes sustainability as encompassing all three dimensions while also acknowledging the criticisms of TBL.

From a business perspective, social sustainability means management cares about the wellbeing of the employees and the community external to the organisation (Pullman, Maloni & Carter 2009; Sancha, Gimenez & Sierra 2016). These practices include internal issues (such as employee safety, working conditions and welfare) and external issues (such as product safety and supporting projects in the community) (Gimenez, Sierra & Rodon 2012; Mani et al. 2016; Marshall et al. 2015a). Socially sustainable firms add value to the communities within which they operate by enhancing the human and societal capital of people (Dyllick & Hockerts 2002).

Environmental sustainability refers to managing natural resources (Sarkis, Zhu & Lai 2011; Tate, Ellram & Gölgeci 2013). These activities relate to reducing waste, emissions and pollution; improving energy efficiency; decreasing the consumption of hazardous/harmful/toxic material and environmental damages; and product stewardship (Gimenez, Sierra & Rodon 2012; Pullman, Maloni & Carter 2009).

Economic sustainability refers to the long-term success and competitiveness of firms (Winter & Knemeyer 2013), encompassing increased sales, market share, profits and longevity. An important aspect of economic sustainability is the idea of business viability and continuance (Pagell & Wu 2009). Viability is the ability to perform, while continuance is long-term business performance.

This review on sustainability in businesses suggests that the concept itself is very complex and involves interplay among various dimensions. Given the complexity, as well as the timely importance of addressing global requirements and business priorities, firms need to recognise how the concept of sustainability applies in particular situations. For example, firms need to prioritise the relevance of various dimensions and determine ways of accumulating relevant sustainability practices in their business operations. In such circumstances, it is important to apply a supply chain perspective in order to develop business sustainability (Paulraj 2011; Tate, Ellram & Kirchoff 2010). Notably, sustainability is only possible as a collective effort of all the parties involved in the business, particularly the partners in the supply chain (Fearne, Martinez & Dent 2012; Lee 2010). The next section reviews how the concept of sustainability is applied in supply chains.

2.3.2 Sustainability in supply chains

The sustainability of a focal firm is not achievable without the support of upstream and downstream partners in the supply chain (Cramer 2008; Faisal 2010; Morali & Searcy 2013). The literature provides evidence of operational and reputational damage to firms as a result of neglecting sustainability practices in supply chain partners (Cruz 2013; Maloni & Brown 2006). Consequently, a supply chain becomes sustainable when all the firms in the supply chain initiate sustainability practices at the individual firm level, and the overall sustainability of the chain depends on the least sustainable firm in the chain (Krause, Vachon & Klassen 2009; Miemczyk, Johnsen & Macquet 2012). Since supply chains are more complex, as they link with extended suppliers and customers,

businesses should implement sustainability at the chain or network level (Gold, Seuring & Beske 2010; Morali & Searcy 2013; Varsei et al. 2014).

Sustainable supply chains have long occupied the attention of academia and industry. The sale of fair trade products in specialised stores first appeared in the 1950s (Laine & Laine 2009). With the incorporation of environmental consideration into the political agendas in the 1960s, the commodity product manufacturers started addressing the impacts of their products, processes and distribution on the natural environment (Vermeulen & Seuring 2009). The inception of the concept of sustainable development in 1987 raised the relevance of sustainability to the business world (Ashby, Leat & Hudson-Smith 2012; Linton, Klassen & Jayaraman 2007). This resulted in increasing demands from public and political representatives for improved environmental, health and safety issues during the 1990s (Kleindorfer, Singhal & Wassenhove 2005). As a result, there has been growing attention of firms to invest in sustainable supply chains that consider environmental and social implications (Kleindorfer, Singhal & Wassenhove 2005; Vermeulen & Seuring 2009). Since then, the topic of a sustainable supply chain has become a mainstream of research (Seuring & Müller 2008a). The incorporation of sustainability into supply chain strategies is of high relevance due to the rapid depletion of natural resources and issues of inequality in wealth distribution (Govindan, Khodaverdi & Jafarian 2013). Consequently, concerns have been raised about activities such as production, transportation, reuse, design, and labour and income distribution along the supply chain (Elkington 1997; Kleindorfer, Singhal & Wassenhove 2005).

The widely recognised interpretation of sustainable supply chain management is that its primary aim is to manage and coordinate key inter-organisational business processes along the supply chain to improve the social and environmental performance of the firm and its suppliers and customers, while remaining profitable (Ahi & Searcy 2013; Carter & Rogers 2008; Gimenez, Sierra & Rodon 2012; Seuring & Müller 2008a). To achieve sustainability, firms in the supply chain should sustain social, environmental and economic performance over an extended period (Pagell & Shevchenko 2014).

Several authors have reviewed the literature in the sustainable supply chain field (e.g., Ahi & Searcy 2013; Ashby, Leat & Hudson-Smith 2012; Carter & Easton 2011; Seuring & Müller 2008a; Winter & Knemeyer 2013). These review studies, conducted

between 2008 and 2013, indicate that conceptual/theoretical papers and case study research dominate the discipline. On the whole, the majority of sustainability studies are based on the environmental dimension, whereas only a limited number of studies have examined the social dimension (Carter & Easton 2011; Winter & Knemeyer 2013) and an even smaller number of studies have examined all three dimensions (Ahi & Searcy 2013; Ashby, Leat & Hudson-Smith 2012). Another noteworthy feature is a tendency to focus only on the upstream practices in the supply chain (Morali & Searcy 2013; Winter & Knemeyer 2013). In their critique of the sustainable supply chain studies, Pagell and Shevchenko (2014) argued that the studies examine how to reduce unsustainability rather than how to develop a sustainable supply chain. The next section reviews the practices that guide sustainability while acknowledging the critique.

2.3.3 Sustainable practices in supply chains

This section reviews sustainability practices under social, environmental and economic dimensions and clarifies the definitions of the sustainability dimensions in a supply chain context. It classifies social and environmental sustainability practices into internal and external. Internal practices represent procedures within the boundary of the firm while external practices reflect activities that involve upstream suppliers and downstream customers.

2.3.3.1 Social sustainability practices

The concept of social sustainability has a wide variety of meanings (Clift 2003; Littig & Griessler 2005; Porritt 2004). Aspects of social sustainability include improving the human wellbeing, enhancing the quality of life, providing social benefits of products and services to satisfy human needs, meeting the needs of stakeholders (Clift 2003; Hubbard 2009) and addressing global issues such as poverty alleviation, gender equity and inequality in income distribution (Boström 2012; Vallance, Perkins & Dixon 2011). This range of aspects of social sustainability makes it difficult to operationalise the concept (Littig & Griessler 2005; Porritt 2004). One interpretation of social sustainability refers to the quality of relationships within the society and how the work impacts the relationships between society and nature (Littig & Griessler 2005), while another interpretation refers to increasing the human capital of employees and advancing the societal capital of communities (Dyllick & Hockerts 2002). The variety

of consideration indicates that social sustainability should be addressed at both individual and organisational levels (Winter & Knemeyer 2013).

From a supply chain perspective, social sustainability refers to addressing social issues (Ashby, Leat & Hudson-Smith 2012), which represent the impact of products or processes on human safety, welfare, community development and protection (Klassen & Vereecke 2012; Yawar & Seuring 2015). It further includes maintaining fair and equitable treatment within the supply chain and socially responsible purchasing (Ashby, Leat & Hudson-Smith 2012). Socially sustainable supply chains, therefore, are those that ensure the welfare of the people within the supply chain and wider society; this view of social sustainability is adopted by the present study (Marshall et al. 2015b). While acknowledging the conceptual differences to the concept of social sustainability, this study excludes the global societal concerns, such as poverty alleviation and unequal income distribution. The reason for the exclusion is that different geographical locations have dissimilar social interests, which result in diverse social concerns among geographically distributed supply chain partners (Mani, Agrawal & Sharma 2015; Sharma & Ruud 2003).

Researchers have paid less attention to the social dimension, despite its importance in developing relationships and providing labour and skills for managing supply chain activities (Ashby, Leat & Hudson-Smith 2012; Hutchins & Sutherland 2008; Winter & Knemeyer 2013). This reduced attention is attributable to the difficulty of measuring social sustainability and meeting the diverse social sustainability requirements of stakeholders in supply chains (Winter & Knemeyer 2013). These discussions on social sustainability in supply chains have focused on managing suppliers for social sustainability (e.g., Gualandris & Kalchschmidt 2016; Sancha, Gimenez & Sierra 2016; Sancha et al. 2015) and identifying social sustainability dimensions regarding focal firms and first-tier suppliers and customers (e.g., Mani et al. 2016).

Nevertheless, a large body of literature is available on corporate social responsibility (CSR) that could provide insight into social sustainability practices in supply chains. The focus of CSR is to address social and ethical issues in corporate behaviours, such as human rights, working conditions and philanthropy (Sharma & Ruud 2003). The underlying philosophy of CSR is to extend the responsible behaviour of firms towards

external communities (Faisal 2010; Wood 2010). The literature highlights CSR studies at both corporate and supply chain levels.

However, Sarkis, Helms and Hervani (2010) argue that CSR practices are not an appropriate representation of social sustainability practices, as CSR activities entail both social and environmental issues simultaneously, even though the environmental aspect is a different sustainability dimension. This review will consider the focus of social sustainability practices only on human-related activities and will draw evidence mainly from studies on socially sustainable supply chains and CSR in supply chains. The next section reviews social sustainability practices within firms and in-between supply chain partner firms.

2.3.3.1.1 Internal social sustainability practices

The internal social sustainability practices address social issues within the organisation in relation to employees and the operational impact on employees (Klassen & Vereecke 2012). These practices mainly address the issues of human rights, working conditions and safety and human development.

a. Human rights

Human rights practices entail labour relations and the equal treatment of employees within the organisation (Maloni & Brown 2006; Yawar & Seuring 2015). These practices encompass paying adequate wages to workers, providing satisfactory working conditions and complying with labour regulations and laws (Carter & Jennings 2004). With increasing concerns regarding human-related issues, organisations such as the International Labour Organisation (ILO) and other institutions have established standards that guarantee satisfactory human relations within organisations, such as Social Accountability International SA8000 and OHSAS 18001 — an occupational health and safety management system (Klassen & Vereecke 2012; Mani, Agrawal & Sharma 2015). These standards address issues relating to labour discrimination, collective bargaining, grievances, child and forced labour, and health and safety aspects of employees (Maloni & Brown 2006; Mani, Agrawal & Sharma 2015). Certifying these standards ensures that firms guarantee employees' rights within the organisation and treat employees in a fair and equitable manner.

b. Health and safety

Health and safety issues relate to assuring working conditions that are free of hazards and accidents (Yawar & Seuring 2015). Health and safety in the workplace is one of the main criteria of a buyer's purchasing decision (Andersen & Skjoett-Larsen 2009; Ehrgott et al. 2011; Leire & Mont 2010). Buying firms have concerns about their suppliers' labour conditions (Sancha, Gimenez & Sierra 2016). Due to the significance of this aspect in improving workplace productivity (Dos Santos, Svensson & Padin 2013), firms regularly train their employees in safety-related matters (Closs, Speier & Meacham 2011; Kortelainen 2008).

c. Employee skills development

Firms provide training programmes for employees to develop operational and other related skills and to facilitate knowledge sharing (Sarkis, Gonzalez-Torre & Adenso-Diaz 2010). For example, Dos Santos, Svensson and Padin (2013) observed that Woolworths in South Africa considered employee skills development activities as important in empowering employees and in growing their business. Furthermore, training helps firms to retain employees (Mani et al. 2016).

The social sustainability of the chain depends on supply chain partners' social sustainability behaviour (Klassen & Vereecke 2012; Yawar & Seuring 2015). In this context, firms take initiatives to influence their supply chain partners to act in a socially sustainable manner.

2.3.3.1.2 External social sustainability practices

This section concentrates on three aspects that can be initiated within organisations to influence the social sustainability of their supply chain partners and the community: fair trade, supplier management and corporate philanthropy.

a. Fair trade

One way of protecting suppliers is through supporting fair trade (Ashby, Leat & Hudson-Smith 2012). This approach ensures that buying firms pay reasonable and adequate prices to suppliers to sustain their businesses (Maloni & Brown 2006; Park-Poaps & Rees 2010). The fair trade approach prevents buying firms from exploiting suppliers (Maloni & Brown 2006).

Stakeholders, especially non-government organisations (NGOs), pressure large firms to initiate activities that ensure employees in supplier firms are fairly treated (Ciliberti, Pontrandolfo & Scozzi 2008). The people engaged in agricultural industries face the poorest economic conditions, with buyers exploiting them by purchasing their crops at cheaper prices. As a result, fair trade is gaining momentum, especially in agricultural and food industries (Maloni & Brown 2006). For example, Nespresso, a coffee retail chain, sourced coffee from more than 50 developing countries in Latin America, Africa and Asia, where the labour conditions were poor, with more than 20 million families in these countries depending on coffee farming (Alvarez, Pilbeam & Wilding 2010). In 2003, Nespresso introduced AAA Sustainable Quality™ Program to manage the social and environmental impact of the business and improve the welfare of coffee farmers and their communities. Nespresso pays premium prices to farmers who have implemented sustainable farming practices (Alvarez, Pilbeam & Wilding 2010; Nespresso 2016) while receiving market benefits by delivering high-quality coffee to consumers (Nespresso 2016).

However, the benefits of fair trade are questionable for buying firms. For instance, Karjalainen and Moxham (2013) stated that consumers are not always willing to pay a premium on fair trade products, even though they pressure firms to adopt ethical practices. Nevertheless, firms receive financial benefits indirectly through their improved reputation as good corporate citizens by adopting fair trade practices (Basu & Palazzo 2008; Fombrun, Gardberg & Barnett 2000).

b. Supplier management

A large and growing body of literature has investigated the role of supplier management as an enabler of social sustainability in the supply chain (Ehrgott et al. 2011; Hollos, Blome & Foerstl 2012; Park-Poaps & Rees 2010). Supplier management has two main branches: supplier assessment and collaboration (Klassen & Vereecke 2012; Sancha, Gimenez & Sierra 2016).

Supplier assessment is the evaluation and control of suppliers in relation to their social performance (Sancha, Gimenez & Sierra 2016). In particular, buying firms set the social sustainability-related criteria for selecting and monitoring suppliers. These criteria relate to working conditions, suppliers' sourcing policies and processes, labour practices and fair wages (Ehrgott et al. 2011). In assessing these criteria, firms require suppliers to

obtain social sustainability certifications such as SA8000 (Klassen & Vereecke 2012). Firms communicate these social sustainability requirements to suppliers as codes of conduct (Andersen & Skjoett-Larsen 2009; Leire & Mont 2010). Firms assess suppliers' compliance with social sustainability criteria through supplier audits (Andersen & Skjoett-Larsen 2009; Ciliberti, Pontrandolfo & Scozzi 2008; Kortelainen 2008). The audit results indicate the areas where a firm lags behind (Foerstl et al. 2010; Sancha, Gimenez & Sierra 2016). Audit results, therefore, become inputs to the development programmes offered to suppliers by buying firms.

Supplier development entails cooperating and collaborating with suppliers for improving socially sustainable performance at the suppliers' sites (Sancha, Gimenez & Sierra 2016). In particular, firms provide training programmes for employees in supplier organisations and share knowledge with other firms (Andersen & Skjoett-Larsen 2009; Ciliberti, Pontrandolfo & Scozzi 2008; Gualandris, Golini & Kalchschmidt 2014). Firms assist suppliers to obtain certifications such as International Organisation for Standardisation (ISO) and become involved in joint problem solving (Klassen & Vereecke 2012; Marshall et al. 2015a; Park-Poaps & Rees 2010). These development activities are beneficial for the buying firms' operational and social performance (Sancha et al. 2015).

c. Corporate philanthropy

The scope of the external socially sustainable practices extends beyond supply chains and includes society as a whole (Hutchins & Sutherland 2008). Philanthropic activities are often in the form of financial donations or supporting activities for the wellbeing of external communities (Maloni & Brown 2006). Such activities include education, training, healthcare and housing for the community (Hutchins & Sutherland 2008; Mani et al. 2016).

Even though philanthropy has been a central focus of corporate sustainability studies, only a few have advocated the relevance of such activities to supply chains and emphasised its lack of presence in supply chain studies (e.g., Maloni & Brown 2006; Mani et al. 2016). Miemczyk, Johnsen and Macquet (2012) and Hutchins and Sutherland (2008) have incorporated philanthropic activities in measuring social sustainability. As philanthropic activities foster a positive image of the firm and its supply chain (Carroll & Shabana 2011; Kim et al. 2010), these activities also increase

the personal affiliation of the general public with the firm as those who see the match between social values of the firm and personal values tend to buy products coming from those supply chains (Luo & Bhattacharya 2006). However, engagement in philanthropic activities is more evident in large firms, as the majority of small and medium entrepreneurs are unable to provide support for communities in supplier countries due to limited resources, especially if the buyers are based in developing countries (Ciliberti, Pontrandolfo & Scozzi 2008).

2.3.3.2 Environmental sustainability practices

In a supply chain context, environmental sustainability refers to incorporating ecological considerations into planning and executing activities in supply chains (Halldórsson, Kotzab & Skjøtt-Larsen 2009; Tseng & Chiu 2013). Environmental sustainability practices focus on the activities adopted by firms to minimise the environmental impact of their operations and to control the behaviour of other firms in the supply chain to act in an environmentally friendly manner (Azevedo, Carvalho & Machado 2011; Golicic & Smith 2013). These practices are more observable as activities that minimise the negative environmental impact of products and processes (Marshall et al. 2015a). These activities involve green supply chain management and corporate social responsibility (CSR) in supply chains.

Similar to social sustainability practices, the environmental sustainability literature also indicates two main categories of such practices. The first category involves activities that ensure the environmental performance of the operations within the firm. Some of these activities include green purchasing, vehicle route and logistics network optimisation, the use of green energy and environmentally friendly product design that reduce the environmental impact of a firm's operations (Ateş et al. 2012; Colicchia, Melacini & Perotti 2011).

The activities that incorporated environmental practices across boundaries of firms formed the second category of environmental sustainability practices. These external-oriented activities mainly constitute collaboration with suppliers and customers (Eltayeb, Zailani & Ramayah 2011; Zhu, Sarkis & Geng 2005). Such cooperation can improve the environmental performance of the focal firm and the supply chain (Zhu & Sarkis 2006). Overall, firms implement various types of environmental practices

covering both internal and external perspectives; these will be reviewed in the next section.

2.3.3.2.1 Internal environmental sustainability practices

Internal environmentally sustainable supply chain practices refer to activities within the firm that make operations environmentally friendly. The literature discusses two main types of activities: green manufacturing and internal environmental management.

a. Green manufacturing

Green manufacturing comprises activities that reduce the environmental impact of the manufacturing process (Golicic & Smith 2013; Holt & Ghobadian 2009). Such activities relate to pollution prevention, cleaner production and resource minimisation (Holt & Ghobadian 2009). They enhance operational performance and lead to desirable outcomes such as reduced cost and improved quality (Rusinko 2007; Tate, Ellram & Gölgeci 2013). For instance, pollution prevention activities increase resource efficiency by reducing resource usage and waste (Erol et al. 2010; Golicic & Smith 2013; Rao & Holt 2005). They also reduce the cost of materials by encouraging recycling and reuse of materials (Rao & Holt 2005). These activities increase productivity (Tate, Ellram & Gölgeci 2013) and hence green manufacturing leads to improved environmental and operational performance.

b. Internal environmental management

Internal environmental management (IEM) initiatives include activities such as top management commitment, the training of employees, the inter-departmental cooperation within the firm, the adoption of environmental management systems and the evaluation of environmental performance (Lee, Kim & Choi 2012; Zhu, Sarkis & Lai 2013). These activities are important to inculcate an environmentally friendly culture within the organisation and to initiate actions with other firms in the supply chain to eliminate or prevent harm to the environment (Lee, Kim & Choi 2012; Zhu, Sarkis & Lai 2013). Top management support is significant for the successful implementation of environmentally sustainable practices as it provides the necessary culture that drives initiatives, encourages inter-departmental cooperation and promotes investments (Kumar, Teichman & Timpernagel 2012; Xie & Breen 2012). Firms that use environmental management systems have shown the influence of such systems on adopting other environmental practices and also demand that suppliers adopt similar environmental

practices (Darnall, Jolley & Handfield 2008; González-Benito & González-Benito 2005; Tate, Ellram & Kirchoff 2010).

Zhu, Sarkis and Lai (2007) observed that IEM positively impacted on environmental and economic performance, but not on operational performance among Chinese manufacturers. However, in a later study, the researchers showed that the IEM indirectly provided long-term economic benefits. In particular, IEM indirectly enhanced the economic performance of Chinese manufacturers by improving their environmental and operational performance through reducing costs and increasing market share (Zhu, Sarkis & Lai 2013). Gimenez, Sierra and Rodon (2012) found that IEM had positive impacts on social, environmental and economic performance. IEM, therefore, improves environmental performance directly and enhances economic performance directly or indirectly.

2.3.3.2.2 External environmental sustainability practices

External initiatives enable a focal firm's supply chain partners to achieve environmental practices. These activities deploy environmental practices across the supply chain from suppliers to final consumers. This concept is equivalent to product stewardship practices (Hart 1997), which integrate the stakeholders' perspective into the product life cycle (Golicic & Smith 2013). The external environmental practices covered in this section are green purchasing, collaboration with suppliers and customers, eco-design and logistics-related activities.

a. Green purchasing

Green purchasing is gaining popularity in the attempt to green the whole supply chain (Colicchia, Melacini & Perotti 2011; Zsidisin & Siferd 2001). It is a major concern as the purchasing function is a critical determinant of the environmental performance of the supply chain (Tate, Ellram & Dooley 2012). Firms that practise green purchasing consider environmental impacts of the products or materials they purchase and the environmental friendliness of the processes adopted by suppliers (Eltayeb, Zailani & Ramayah 2011; Hsu et al. 2013; Rao & Holt 2005).

Green purchasing mainly revolves around supplier evaluation for environmental performance and assisting suppliers to improve their environmental performance (Hsu et al. 2013; Rao & Holt 2005). Supplier evaluation includes supplier certification and the purchasing of eco-labelled products, which display the environmental impact of the

product and include environmental criteria in supplier assessment (Colicchia, Melacini & Perotti 2011). Assisting suppliers cover activities such as conducting environmental awareness programmes and providing recommendations on environmental activities (Rao & Holt 2005). These activities ensure that suppliers participate in greening the supply chain process (Caniëls, Gehrsitz & Semeijn 2013; Gimenez & Tachizawa 2012; Green Jr et al. 2012a; Vachon & Klassen 2007).

The outcomes of green purchasing are environmental, financial and operational (Eltayeb, Zailani & Ramayah 2011; Rao & Holt 2005). Benefits include reduction in pollution and waste and compliance with regulations by buying firms (Rao & Holt 2005). Eltayeb, Zailani and Ramayah (2011) found that green purchasing also provides benefits to suppliers as it enforces suppliers to comply with buyers' environmental criteria in business transactions. Green purchasing involves less investment compared to other sustainable activities since it requires less time, training and supporting technologies (Zhu, Sarkis & Lai 2007). Since green purchasing deals with the inputs to the operations, scholars have considered it as a proactive practice (Laosirihongthong, Adebanjo & Tan 2013). Green purchasing integrates suppliers with the organisation (Rao & Holt 2005) and results in synergistic benefits by combining green purchasing and supplier management.

b. Collaboration with suppliers

Collaboration encompasses engaging with suppliers by providing training and other supporting activities, sharing environmental information and streamlining environmental goals (Holt & Ghobadian 2009; Rao & Holt 2005; Vachon & Klassen 2008). Studies have considered collaboration as a part of green purchasing as firms need to assist suppliers to develop their environmental performance before exercising these criteria in purchasing decisions (Colicchia, Melacini & Perotti 2011; Tate, Ellram & Dooley 2012; Zhu, Sarkis & Lai 2013; Zsidisin & Siferd 2001). However, Holt and Ghobadian (2009) report that most of the manufacturing firms in their study practised supplier evaluation, but did not engage in collaboration. The challenge to collaboration is creating conditions that support information sharing and willingness of the firms to enter into joint efforts (Colicchia, Melacini & Perotti 2011).

c. Collaboration with customers

There are studies which have shown that the collaboration with suppliers alone is inadequate in achieving environmental sustainability in the supply chain, and requires collaboration with customers as well (Dey & Cheffi 2013; Kim & Rhee 2012; Lee, Kim & Choi 2012; Vachon & Klassen 2008). Collaboration with customers is present where focal firms collaborate with partner firms in various tiers downstream (B2B) (Eltayeb, Zailani & Ramayah 2011; Vachon & Klassen 2008) and collaborate with final consumers (B2C) (Azevedo, Carvalho & Machado 2011). Collaboration with downstream partners is vital to prevent and control pollution (Green Jr et al. 2012a; Vachon & Klassen 2007) and is visible in terms of initiatives in cost reduction, customer support and joint ventures (Azevedo, Carvalho & Machado 2011). Collaborations with customers improve economic performance directly and indirectly through improved environmental and operational performance (Green Jr et al. 2012b; Zhu, Sarkis & Lai 2013).

Collaboration with downstream firms is unrealistic when the downstream firms do not receive benefits from the environmental efforts (Sarkis 2003; Vachon & Klassen 2007). For example, in a study of the package printing industry, Vachon and Klassen (2007) noticed that the major customer firms of one of the plants they studied refused to adjust processes to support energy and packaging conservation at the supplier plant as the adjustment did not result in any operational benefits to the customer firms. Collaborations for environmental performance improvements are likely to happen when the benefits are aligned with the competitive priorities of the downstream firms and the performance improvements accrued along the supply chain (Azevedo, Carvalho & Machado 2011; Vachon & Klassen 2007).

The significance of end consumer pressure heightens the need for developing relationships with customer firms in order to effectively meet consumer expectations of environmental activities (Ageron, Gunasekaran & Spalanzani 2012). Capturing information from end consumers and sharing it within the chain are vital to improving environmental sustainability in operations (Wong 2013). Firms embed customer perceptions in designing products and processes (Zhu, Sarkis & Lai 2013). The information gathered from customers is instrumental in developing codes of conduct for green purchasing and other supplier monitoring and evaluation systems. Consequently,

collaboration with both final customers and the firms downstream are significant in achieving environmental sustainability.

d. Eco-design

Eco-design involves developing an environmentally friendly product which minimises the environmental impact during all the stages of the product life cycle (Eltayeb, Zailani & Ramayah 2011). It embeds attributes such as recycling, as well as the disposal and reuse of products and their components at the design stage (Ashby, Leat & Hudson-Smith 2012). The concept of eco-design also extends towards the design of processes to reduce waste and increase efficiency. Some studies have referred to eco-design as an innovative practice in supply chains (Carbone, Moatti & Wood 2012; Santolaria et al. 2011) as it involves developing a new product or process.

Eco-design embeds the life cycle perspective in product design and accumulates ideas from the various parties engaged in manufacturing and consuming the product. Consequently, it necessitates sharing information regarding the environmental requirements of the customers and other stakeholders (Shi et al. 2012; Zhu, Sarkis & Lai 2013). Designing a new product requires the incorporation of stakeholder requirements and suppliers' capability of supporting environmentally friendly production. Consequently, the scope of eco-design is much broader as it involves cooperation with external parties such as with supplier and buying firms. This function involves technology transfers between firms, particularly when supply chain partners are based in countries at different levels of development (Zhu, Sarkis & Lai 2007).

However, studies have shown inconsistent results for the effectiveness of eco-design on sustainability. Eltayeb, Zailani and Ramayah (2011) claimed that eco-design only provides performance improvements within the firm. However, the claim was disputed by Zhu, Sarkis and Lai (2013) who found that eco-design indirectly improves environmental performance in the supply chain by promoting externally oriented activities such as green purchasing and cooperating with customers. Furthermore, it improves intangible outcomes in terms of image and reputation (Eltayeb, Zailani & Ramayah 2011) but shows mixed results on financial performance (e.g., Eltayeb, Zailani & Ramayah 2011; Zhu, Sarkis & Lai 2007, 2013). This practice may seem financially unattractive in the short term due to the initial investment required for its implementation (Zhu, Sarkis & Lai 2007).

e. Reverse logistics

Reverse logistics refers to the process of collecting products and materials from consumers back upstream in the chain (Cardoso, Barbosa-Póvoa & Relvas 2013; Govindan, Soleimani & Kannan 2015). This process transfers the ownership of end-of-life products to manufacturers and suppliers (Keh et al. 2012). Reverse logistics promotes reuse, remanufacturing, repair, disposal and recycling of products (Eltayeb, Zailani & Ramayah 2011; Keh et al. 2012). As a result, reverse logistics reduces environmental impacts (Eltayeb, Zailani & Ramayah 2011).

Reverse logistics improves environmental performance through waste reduction (Eltayeb, Zailani & Ramayah 2011; Laosirihongthong, Adebanjo & Tan 2013). Furthermore, it reduces material inputs and preserves the environment by encouraging recycling, reuse and by reducing energy consumption. These practices, in turn, lower the cost of operations (Eltayeb, Zailani & Ramayah 2011; Jack, Powers & Skinner 2010). A criticism of reverse logistics is that despite significant investments (Cardoso, Barbosa-Póvoa & Relvas 2013; Laosirihongthong, Adebanjo & Tan 2013), the cost reductions are relatively small and do not lead to substantial financial benefits (Eltayeb, Zailani & Ramayah 2011; Jack, Powers & Skinner 2010). Particularly, implementation of reverse logistics incurs structural changes in the networks, introduces new intermediaries and investment in infrastructures, such as warehousing, transportation and information systems (Carbone & Moatti 2008; Erol et al. 2010). It also increases the environmental cost by increasing the transportation of products in the reverse flow and release of hazardous material during recycling (Tsoulfas & Pappis 2006).

As a remedy to the difficulties in reverse logistics, there are firms who outsource this function to third-party logistics providers, who provide infrastructure such as information systems and the equipment required for reverse logistics (Govindan et al. 2012). Obtaining the service from third-party logistics providers is cheaper than investing in reverse logistics individually (Govindan et al. 2012). Third-party providers also provide services that dispose hazardous materials with minimum damages to the environment (Tsoulfas & Pappis 2006). Furthermore, firms can reduce logistics costs and improve firm performance by obtaining the assistance of these third-party firms (Jack, Powers & Skinner 2010; Govindan et al. 2012).

Firms implement reverse logistics in order to comply with regulatory requirements (Keh et al. 2012). For example, in Turkey, many industries implement reverse logistics only due to legislative requirements for the end-of-life take-back laws in the European Union (Erol et al. 2010). The other factors that govern the implementation of reverse logistics are the feasibility and profitability of the remanufactured products received through this function (Erol et al. 2010; Tsoulfas & Pappis 2006). Erol et al. (2010) found that firms in electronic and the electric industries were reluctant to implement reverse logistics, as it may damage firms' image by creating the impression that they sell recycled or recovered products or material.

However, despite concerns about reverse logistics, it appears that this function enhances firms' reputation and image overall (Eltayeb, Zailani & Ramayah 2011; Erol et al. 2010). Additionally, reverse logistics also provides social benefits by providing job opportunities, developing low-skilled labour, improving health and safety, developing new product and process technologies and enhancing quality-of-life (Kleindorfer, Singhal & Wassenhove 2005; Sarkis, Helms & Hervani 2010). The extent of implemented reverse logistics, therefore, varies from industry to industry.

2.3.3.3 Economic sustainability in supply chains

Economic sustainability refers to sustaining a favourable financial and market position in the long term (Gopalakrishnan et al. 2012; Halldórsson, Kotzab & Skjøtt-Larsen 2009). The idea of a sustainable supply chain is to be economically profitable while thriving in a socially and environmentally sustainable context (Beske 2012; Carter & Rogers 2008; Seuring & Müller 2008a). Carbone, Moatti and Wood (2012) observed that firms are increasingly being expected to maintain economic performance through social and environmental sustainability practices. However, socially and environmentally friendly practices have been found to have both negative and positive influences on the economic performance of the firm (Mefford 2011).

In the sustainable supply chain literature, researchers have discussed economic sustainability in terms of sales and market share (Dos Santos, Svensson & Padin 2013; Rao & Holt 2005; Zailani et al. 2012), profits (Rao & Holt 2005; Vasileiou & Morris 2006), and return on investments (Dos Santos, Svensson & Padin 2013; Paulraj 2011). These measurements reflect the relevance of financial and market performance for economic sustainability. There are studies which have also considered operational

performance as the main indicators of economic sustainability (e.g., Varsei et al. 2014; Vasileiou & Morris 2006; Zailani et al. 2012). These items include efficiency (Vasileiou & Morris 2006; Zailani et al. 2012), product quality (Vasileiou & Morris 2006) and service levels (Varsei et al. 2014; Vasileiou & Morris 2006). However, because these operational performance ratings ultimately lead to sales and market performance, researchers such as Vasileiou and Morris (2006) and Zailani et al. (2012) have considered all these types of indicators together.

There are views that oppose the long-held economic dominance in business. Authors such as Ignatius (2012) and Mackey (2013) argue that businesses should not only maximise shareholder wealth but adopt a broader perspective in wealth creation. Firms should address social and environmental issues at a global level by reducing hunger, poverty, global warming and resource depletion through their economic activities, which will eventually accelerate business growth (Ignatius 2012; Mackey 2013). Consideration given to these aspects provides the view of long-term sustainability. A firm engages with supply chain partners across the globe. Each country has different levels of social and environmental issues regarding water, food, energy, poverty, health conditions and ecological issues (Moldan, Janoušková & Hák 2012; Vallance, Perkins & Dixon 2011). Long-term sustainability, therefore, also depends on the country context. Banerjee (2010) emphasised the role of corporations to govern the sustainability agendas of the governments in which they operate. Businesses should improve the sustainability of societies through their corporate activities by addressing the sustainability requirements of the stakeholders (Banerjee 2011). However, addressing sustainability at this broader level is difficult given the diverse interests and the geographical dispersion of stakeholders. Sharma and Ruud (2003) mentioned that attaining sustainability is possible within networks of firms operating in a particular geographical region. The applicability of divergent views for business sustainability is, therefore, questionable.

There are equally strong views on sustainability that maintain a balance of addressing global issues (e.g., Bansal 2005; Dyllick & Hockerts 2002). According to Bansal (2005), corporate sustainability is achieved through the integration of environmental integrity (by pollution control and prevention, and product stewardship), social equity (response to social, environmental and economic issues of the stakeholders), and economic prosperity (increasing value creation by improving goods and services). This

interpretation has included global concerns regarding the social equity of responding to stakeholder requirements. According to Dyllick and Hockerts (2002), sustainability is the maintenance and growth of social, environmental and economic capital. They have incorporated the global sustainability concerns by way of protecting natural environment for future generations and delivering positive impacts to societies through corporate activities.

Firms have broadened their responsibility to include the social and environmental performance of the whole supply chain (Ignatius 2012). In an interview with Paul Polman (the chief executive officer, at Unilever — one of the world's largest, multinational, fast-moving, consumer goods manufacturers), Ignatius (2012) mentioned that Unilever has a strategy to contribute to the society as a part of their business model. The firm selects shareholders who support this long-term strategy with the aim to increase profits by 2020 while minimising its environmental impact by half and addressing social needs (Ignatius 2012).

Furthermore, studies by Gold, Hahn and Seuring (2013) and Vasileiou and Morris (2006) display inconclusive results for the prioritisation of implementing sustainable practices under each of the dimensions. In a study of multinational firms, Gold, Hahn and Seuring (2013) found that firms move to environmental sustainability once they reach social and economic sustainability. Vasileiou and Morris (2006) observed that the supply chain partners in the potato industry in the United Kingdom consider economic sustainability as essential for implementing social and environmental initiatives in industry. Yakovleva, Sarkis and Sloan (2012) reported similar results examining priorities for implementing sustainability practices. They found that many operations-related senior managers placed a higher priority on economic success than on environmental or social sustainability in the potato and chicken supply chains in the United Kingdom. These findings highlight the inter-dependency of the sustainability dimensions. Notably, economic sustainability is influential in implanting social and environmental practices. The results of a study by Margolis, Elfenbein and Walsh (2007) reinforced the argument that financially strong firms are more likely to have high corporate social performance, pointing to the cost associated with implementing social and environmental sustainability practices. Economic sustainability is, therefore, influential on social and environmental sustainability despite the importance of all three dimensions.

2.3.4 Developing a sustainable supply chain

There are very few studies investigating how to create a sustainable supply chain (e.g., Beske 2012; Beske, Land & Seuring 2014; Beske & Seuring 2014; Pagell & Wu 2009). These studies have examined supply chain development from two perspectives as practices point of view and the capability view.

The focus of the studies that examined practices were on the managerial and supply chain practices required for implementing sustainability practices in supply chains (e.g., Beske 2012; Beske, Land & Seuring 2014; Beske & Seuring 2014; Pagell & Wu 2009). Pagell and Wu (2009) termed these practices as managerial orientation, developing long-term relationships with suppliers, adjusting the supply chain to address changing sustainability requirements of stakeholders, maintaining best practices such as process improvements, employee engagements and assessing sustainability performance. The other studies by Beske (2012), Beske, Land and Seuring (2014) and Beske and Seuring (2014), classified these practices in the categories of orientation, continuity, collaboration, risk management and proactivity. According to these studies, developing a sustainable supply chain requires support from top management, commitment of supply chain partners, collaboration with stakeholders, managing risk for supply chain disruptions and proactively meeting the sustainability needs of the stakeholders. Nevertheless, the practices identified by Pagell and Wu (2009) are similar to those identified by Beske (2012), Beske, Land and Seuring (2014) and Beske and Seuring (2014).

The studies that examined capabilities focused on those required to implement managerial and supply chain practices for sustainable supply chains (e.g., Beske 2012; Beske, Land & Seuring 2014). These capabilities belonged to co-evolving, knowledge assessment, reconceptualisation, partner development and reflexive supply chain control (Beske 2012; Beske, Land & Seuring 2014). According to this view, a sustainable supply chain development process requires the capabilities to understand and acquire new knowledge and capabilities, identify new stakeholders that influence supply chain performance, strengthen weak supply chain partner firms and to evaluate the functionality of sustainability practices on stakeholder requirements. This view emphasised that sustainable supply chains rely on capabilities that constantly identify pressures, assess present practices and adopt new knowledge and capabilities to meet new requirements by changing the existing relationships with partner firms. These

capabilities resemble those of a dynamic nature (Beske 2012; Beske, Land & Seuring 2014).

The above practices and capabilities together provide the underlying mechanisms to implement sustainability practices (Beske 2012; Beske, Land & Seuring 2014). For example, a firm needs management support to develop an appropriate culture to propagate sustainability orientation and to accept that returns for its investments in sustainability initiatives will be long-term (Pagell & Wu 2009). Acquisition of new knowledge is essential in order to understand sustainable technologies and to update policies (Beske 2012). However, these studies have not examined how these practices and capabilities influence each sustainability dimension individually.

In dynamic business environments, supply chains possess capabilities that enable operating under market dynamics (Defee & Fugate 2010). A problem in the supply chain area is the absence of investigations on how such capabilities are utilised to develop sustainable supply chains. Drawing from the literature, agility and resilience are suggested as two such capabilities enabling supply chains to perform in dynamic market conditions. Carter and Rogers (2008) proposed agility and resilience as risk-mitigating approaches for sustainable supply chains. Savitz and Weber (2013) suggested agility is imperative for sustainability, as it provides the ability to recognise, understand and respond quickly to the changes in social, environmental and economic factors. They also emphasised the importance of resilient capabilities in minimising risks of disruptions to achieve sustainability. Fiksel, Goodman and Hecht (2014) stressed agility and resilience as prerequisites for sustainable supply chains. Bals and Tate (2016) highlighted the significance of agile capabilities to develop sustainable supply chains by stressing the need to incorporate both demand-side and supplier-side considerations and to create a shared value among supply chain partners through information sharing. They also suggested that supply chains should be resilient to address disruptions caused by climate change issues. The following sections review the existing literature in agile and resilient supply chains.

2.4 Agile supply chains

This section reviews the concept of agility and how it is approached in supply chain studies. This is followed by a discussion of the pressing concern for agility in supply chains. Finally, it reviews the characteristics, practices and capabilities of an agile supply chain.

2.4.1 Overview of the concept of agility

Agility refers to the ability of a firm to respond to changing market conditions while satisfying customers and meeting organisational objectives (Yauch 2011). It recognises and anticipates market fluctuations, and reconfigures resources quickly to serve markets (Gligor & Holcomb 2012a; Yusuf et al. 2014a). Both the manufacturing and supply chain literature have emphasised agility with its relevance to being competitive in the current dynamic markets (Browaeys & Fisser 2012; Chakraborty & Mandal 2011; Ismail, Poolton & Sharifi 2011; Yusuf et al. 2014b).

The concept of agility originated in manufacturing systems initially, and later expanded from the organisational level to the supply chain level. An early reference to agility appeared in 1991 in the report entitled *21st Century Manufacturing Enterprise Strategy* (Castro, Putnik & Shah 2012; Yusuf & Adeleye 2002). The report described agility as a solution that US manufacturers can offer to the next generation of competition. Combining technology, management and workforce within an organisation, agility allows a firm to respond rapidly to changing demands for high-quality and highly customised products (Nagel 1992). Agile manufacturing expanded the focus of manufacturing beyond flexibility in the mix and volume of production to achieve a higher degree of speed and an enhanced response to demand (Christopher 2000). It has become a customer-oriented management approach which demonstrated both reactive and proactive measures to meet customer needs by changing the processes, products or services and volume of productions (Castro, Putnik & Shah 2012). Organisations that practise agile manufacturing are capable of achieving multiple objectives such as cost, quality, flexibility, delivery, service and leading-edge technological production (Eshlaghy et al. 2010; Vázquez-Bustelo, Avella & Fernández 2007; Yusuf & Adeleye 2002). Consequently, agile manufacturing strengthened the operational, market and financial performances of organisations (Vázquez-Bustelo, Avella & Fernández 2007).

Realising the benefits of agility in manufacturing systems, managers later expanded the concept to the entire business (Christopher 2000; Sherehiy, Karwowski & Layer 2007). This created a growing interest in agile organisations among researchers. Dove (1994) suggested agility as an ability to adapt to environmental changes and stated that it is a missing component in organisations. An agile organisation incorporates this proficiency into all its processes (Christopher 2000) to achieve responsiveness in strategies, technologies, personnel, business processes and facilities (Tseng & Lin 2011). Agility improves responsiveness by combining flexible organisational structures and human skills (Christopher 2011). The level of agility an organisation attains is limited by the ability of the other parties whom the firm engages with (Prater, Biehl & Smith 2001; Swafford, Ghosh & Murthy 2006a) and the types of environment in which it operates (Yusuf et al. 2014b).

The parties that a firm engages with comprise other firms in their supply chains. Their ability to be agile represents the overall agility of the firm's supply chain (van Hoek, Harrison & Christopher 2001). The scope of agility, therefore, should be extended beyond the firm level to cover the ability of supply chain partners (Braunscheidel & Suresh 2009; Lee 2004) to create an agile supply chain as a whole.

2.4.2 Supply chain agility

The concept of agile organisations extended to a discussion of agile supply chains with an article by Dove (1996) entitled *Agile Supply Chain Management*. In an agile supply chain, all the parties are integrated and coordinated with one another in order to identify market changes and to respond to them quickly and accurately (Christopher 2000; Tse et al. 2016). In such supply chains, firms have integrated business processes with the use of information technology (van Hoek, Harrison & Christopher 2001). As a result, firms may demand information quickly and can adjust their production plans and inventories while coordinating with suppliers to procure the required materials for timely production (Agarwal, Shankar & Tiwari 2007; van Hoek, Harrison & Christopher 2001; Yusuf et al. 2014b). The concept of agile supply chains appears in various studies under a variety of terminologies. Frequently adopted terms are agile supply chains, supply chain agility and agility in supply chains. These terminologies have slight variations according to the level of the supply chain they represent. For example, the term agile supply chain reflects the composition of a supply chain to

enable agility (e.g., Christopher 2000; Qrunfleh & Tarafdar 2013), whereas supply chain agility (e.g., Blome, Schoenherr & Rexhausen 2013; Tse et al. 2016) and agility in supply chain (e.g., Sharifi, Ismail & Reid 2006; Vinodh, Prakash & Selvan 2011) refer to the capability of supply chain firms to be agile and to make the supply chain partner firms agile in turn.

This study adopts the definition of supply chain agility as used by Blome, Schoenherr and Rexhausen (2013), Braunscheidel and Suresh (2009), Gligor, Esmark and Holcomb (2015) and Yang (2014). Based on these studies, supply chain agility is defined as the ability of a firm to adjust its supply chain to rapidly respond to market changes.

The main features of supply chain agility are detecting market changes in a timely manner and responding to them by reconfiguring resources in the supply chain. The most frequently-cited elements in the literature that encompass agility are sensitivity to customer requirements, integration of information and processes, and a team approach to response (Christopher 2000; van Hoek, Harrison & Christopher 2001; Yusuf et al. 2014a). Customer sensitivity and network integration are about detecting market changes (Christopher 2000; van Hoek, Harrison & Christopher 2001). Firms detect market changes in real time through information and communication technologies (Yang 2014). The shared information is demand-related and operations-related, such as for inventory, planning and procurement. This information integration increases visibility amongst the supply chain partners (Braunscheidel & Suresh 2009) and enables joint planning (Braunscheidel & Suresh 2009) to streamline processes, reconfigure resources within the chain and to respond to changes accordingly.

2.4.3 Attributes of supply chain agility

Supply chain agility focuses on increasing responsiveness (Aronsson, Abrahamsson & Spens 2011; Christopher, Lowson & Peck 2004; Christopher & Towill 2002; Qrunfleh & Tarafdar 2013; Wieland 2013; Xu & Beamon 2006). Responsiveness refers to addressing market changes appropriately when they occur. Supply chain agility develops responsiveness by identifying and anticipating the market changes while reacting to them ahead of their competitors (Yusuf et al. 2014a). However, it has been criticised that agility is mainly about responsiveness and is purely a measure of reaction time (Swafford, Ghosh & Murthy 2008). Many studies describe the role of supply chain agility as being responsive to unpredictability or changes in market conditions (e.g.,

Carvalho, Azevedo & Cruz-Machado 2012; Gligor & Holcomb 2012b; Lee 2004; Swafford, Ghosh & Murthy 2006a; Tse et al. 2016). However, there are studies which stress the importance of proactive actions to explore opportunities, rather than always being reactive to market changes (Fayezi, Zutshi & O'Loughlin 2015; Li et al. 2008).

Even though the main concern of the concept is gaining control of market changes, there is no consistency in defining the types of market changes that require agility. The discussion of supply chain agility has largely concentrated on demand variations only (for notable exceptions, see Blome, Schoenherr & Rexhausen 2013; Braunscheidel & Suresh 2009; Charles, Lauras & Wassenhove 2010; Khan & Pillania 2008; Li et al. 2008; Yusuf et al. 2014b). In fact, agility has the ability to overcome changes in both demand and supply. Li et al. (2008) and Li, Goldsby and Holsapple (2009) identified three types of market variations that cause demand and supply changes. These variations are the ones with strategic importance which result from changes in business environments such as technology, political, social and demographic-related factors; changes in available demand and supply at a given moment; and one-off incidents.

The important features of supply chain agility in responding to changes are the speed of the response and the ability to develop appropriate solutions to changes (Swafford, Ghosh & Murthy 2008). Agility delivers timely responses that minimise the risk of loss incurred in the firms. Firms thereby become more competitive (Swafford, Ghosh & Murthy 2008). Agility, therefore, prevents a firm’s supply chain from being hampered by market changes.

Supply chain agility involves various processes in firms to detect changes and reconfigure resources (Carvalho, Azevedo & Cruz-Machado 2012). It delivers the ability to adjust along with market changes (Wieland & Wallenburg 2012). These features reflect supply chain agility as a dynamic capability with the abilities to identify, integrate and reconfigure resources internally and externally in response to changing environmental conditions (Eisenhardt & Martin 2000; Teece, Pisano & Shuen 1997). Supply chain agility is, therefore, considered as a dynamic capability that minimises the risks to a firm’s supply chains by making it less vulnerable to market changes in demand and supply (Blome, Schoenherr & Rexhausen 2013; Gligor, Esmark & Holcomb 2015).

2.5 Supply chain resilience

There has been growing interest among researchers on resilience as a risk management approach (e.g., Pettit, Croxton & Fiksel 2013; Scholten, Scott & Fynes 2014; Wieland 2013). Sudden, unpredictable and unavoidable changes to business environments, such as tsunami, hurricanes, and financial crises have increased the need for resilience in organisations (Sáenz & Revilla 2014). Depending on the severity of market changes, researchers have used disruptions or crisis situations to demonstrate the applicability of resilience. As a consequence, the term resilience is gaining recognition as a capability for firms to overcome unexpected changes and remain competitive (Fiksel et al. 2015).

The predominant view of resilience is the ability of an organisation to be restored to a desirable state after being disturbed (Christopher & Peck 2004; Ponomarov & Holcomb 2009). The concept has appeared in the area of emergency management as applied in disaster recovery (Ponomarov & Holcomb 2009; Scholten, Scott & Fynes 2014), with the underlying assumption that resilience sits with the ability to cope with unexpected and disruptive changes (Carvalho, Duarte & Cruz-Machado 2011; Wieland 2013).

The various interpretations of resilience share common elements: an ability to prepare for unforeseen events (Jüttner & Maklan 2011; Ponomarov & Holcomb 2009), to minimise the negative consequences of disruptions (Melnyk et al. 2014; Ponomarov & Holcomb 2009), to recover from disruptions (Christopher & Peck 2004; Colicchia & Strozzi 2012; Ponomarov & Holcomb 2009; Sheffi & Rice 2005) and to move to a new or improved market position (Christopher & Peck 2004; Jüttner & Maklan 2011; Wieland & Wallenburg 2013). Another view of the concept is minimising the causes that lead to disruptive situations (Winston 2014). This study defines resilience as the ability to prepare for unexpected events, respond to these events, recover from disruptions and attain a more desirable position while minimising the causes leading to disruptions (within the firm's control).

2.5.1 The concept of supply chain resilience

Resilience explains how firms adapt to and survive in disruptive situations (Pettit, Croxton & Fiksel 2013). The increasing number of supply chain partner firms and their strong interconnectedness heighten the vulnerability of supply chains to the disruption caused by a single firm (Chopra & Sodhi 2014; Gunasekaran, Subramanian & Rahman

2015). Resilience, therefore, has gained popularity as a capability in managing risk in the supply chain literature (Colicchia & Strozzi 2012; Wieland 2013).

Most of the supply chain resilience literature is theoretical, and the limited number of empirical studies are largely qualitative (Mandal 2014; Nils-Ole et al. 2015; Tukamuhabwa et al. 2015). As stated by Ashby, Leat and Hudson-Smith (2012) and Nils-Ole et al. (2015), most of these theoretical papers and qualitative studies suggest that this area of study is still in its nascent phase.

A definition of supply chain resilience is 'the ability of a system to return to its original state or move to a new, more desirable state after being disturbed' (Christopher & Peck 2004, p. 2). Following similar assumptions, Blackhurst, Dunn and Craighead (2011) see it as an ability of a firm to recover from disruptive events, and Colicchia and Strozzi (2012) suggest that it is a way of adapting to regain a new stable position. These authors have used different terminologies such as return or recover, but have held the same view of acquiring a stable operational state after a disruption. In fact, a firm recovers from a disruption by returning to its normal operations or progressing for better performance (Tukamuhabwa et al. 2015). The objectives of resilience are twofold: to recover to a desired state within a reasonable time at an acceptable cost, and minimise the negative consequences of the disruptions (Carvalho, Azevedo & Cruz-Machado 2012; Johnson, Elliott & Drake 2013).

Ponomarov and Holcomb (2009), in their review of supply chain resilience, conceptualised it as:

> The adaptive capability of the supply chain to prepare for unexpected events, respond to disruptions, and recover from them by maintaining continuity of operations at the desired level of connectedness and control over structure and function (Ponomarov & Holcomb 2009, p. 131).

Two recent review studies by Nils-Ole et al. (2015) and Tukamuhabwa et al. (2015) hold a similar view, but with the addition of growth after recovery, which reflects moving to an improved market position. These interpretations, as well as all the other conceptualisations of supply chain resilience, have demonstrated it as a capability in adapting to disruptive situations.

2.5.2 Attributes of resilient supply chains

A resilient supply chain adapts to disruptive situations in two ways (Melnyk et al. 2014; Tukamuhabwa et al. 2015). First, a supply chain tries to continue functioning despite the disruptions. While continuing operations, supply chains reach a point where they are unable to bear the disruptive condition, where operations are affected. At this point, the second stage of resilience emerges as the firm responds and recovers from damages (Melnyk et al. 2014; Tukamuhabwa et al. 2015). Resilience has been identified as a three-phase process of readiness, response and recovery (Jüttner & Maklan 2011; Sheffi & Rice 2005). According to Nils-Ole et al. (2015) and Tukamuhabwa et al. (2015), resilience consists of four phases: readiness, response, recovery and growth.

Readiness is the preparation of supply chains to respond to disruptions (Jüttner & Maklan 2011; Ponomarov & Holcomb 2009) and firms achieve this through improving robustness. It is the robustness of the supply chain that resists changes instead of reacting to them (Azevedo et al. 2013; Wieland 2013). Robustness is the ability to withstand operations under a variety of conditions, such as attacks that cause deviations and disruptions to supply and demand (Colicchia & Strozzi 2012; Wieland 2013). An approach to building robustness in production operations is redundancy that increases capacities by adding resources such as buffer stock, multiple machines and multiple suppliers (Nils-Ole et al. 2015; Wieland & Wallenburg 2013). Firms assemble capacities at critical places in the chain (Christopher & Peck 2004). Such resource accumulation in critical supply chain partners mitigates the risks encountered by a supply chain. As a result, redundancy contributes to resilience.

Firms need to understand critical paths in their supply chain networks to identify stages which are at high-risk levels in disruptive situations (Blackhurst, Dunn & Craighead 2011; Chopra & Sodhi 2014). The increased capacities required at certain points sometimes incur a reconfiguration of supply chain structures such as adding new suppliers (Christopher & Peck 2004), the incorporation of which alters the control mechanisms within a supply chain. Here, information sharing plays an important role in creating a high level of supply chain intelligence to interpret environmental changes and clearly identify possible future risks (Brandon-Jones et al. 2014; Christopher & Peck 2004). The shared information facilitates decisions on where to accumulate resources and jointly create strategies to address market changes (Christopher & Peck 2004). In this context, collaboration between partner firms is supportive for information sharing

and reconfiguration (Christopher & Peck 2004). Consequently, information sharing equips supply chains with the capacity to resist and respond to changes.

Supply chains respond and recover from disruptions by adjusting their operations and structures (Blackhurst, Dunn & Craighead 2011). These features demonstrate the flexibility of a resilient supply chain. Resilience is, therefore, a combination of redundancy and flexibility (Sheffi & Rice 2005). Even though authors such as Sheffi and Rice (2005) and Zsidisin and Wagner (2010) assume flexibility and redundancy are two separate dimensions of resilience, Jüttner and Maklan (2011) argue that redundancy is a route to flexibility. By keeping the additional resources, redundancy provides the possibility to adjust processes and thereby control supply chain functions. All these attributes enable supply chains to quickly restore product flows to a more stable condition.

Supply chain resilience studies have focused on the areas of responding to disruptions, recovering to the original state or moving to a more desired position, and preparing to minimise the negative consequences of disruptions (e.g., Blackhurst, Dunn & Craighead 2011; Golgeci & Ponomarov 2013; Johnson, Elliott & Drake 2013; Ponomarov & Holcomb 2009). Nevertheless, preparation has a broader scope, which is to minimise disruptions in the long term (Chopra & Sodhi 2014; Fiksel et al. 2015). Winston (2014) suggested that an important aspect of resilience is the minimising of causes that lead to disruptions. He argues that disruptions occur in the absence of addressing their real causes. Identifying the sources of disruptions is, therefore, important for resilience (Chopra & Sodhi 2014). For example, one approach to resilience is to be less reliant on natural resources for a firm's operations (Winston 2014). Less use of natural resources helps to protect the environment and minimise climate issues. Also, less natural inputs enable supply chains to withstand declining resources and increasing prices of natural resources (Winston 2014). Consequently, a firm can reduce environmental damages and reduce cost. On the one hand, less use of natural resources reduces the extraction from nature and thereby reduces environmental damages. On the other hand, when material prices increase due to the scarcity of natural resources, a firm will be in an advantageous position as the changes will have little impact on its operations. Resilience acquired in this way decreases the vulnerability and risks to supply chains, and firms become more environmentally and economically sustainable.

Studies have mostly offered resilience in the context of sudden changes that have high impacts, such as crises and disruptions (e.g., Johnson, Elliott & Drake 2013; Jüttner & Maklan 2011; Ponomarov & Holcomb 2009; Scholten, Scott & Fynes 2014). While the meaning of sudden changes extends to unexpected market fluctuations with any intensity of change, currently this aspect remains unacknowledged. The concept of resilience should also be developed to cover the aspects of slow and long-term disruptions. Considering the ability to address market changes and drawing from previous interpretations, supply chain resilience is assumed to be an ability of a firm to prepare, respond and recover from sudden changes while trying to minimise the causes of sudden and long-term changes. These characteristics reflect resilience as a dynamic capability.

Both agility and resilience as dynamic capabilities provide an argument for sustainability, but their relationships with sustainability are yet to be examined. The next section reviews the theories applicable in combining agility and resilience and applying them to sustainable supply chains.

2.6 Applicable theories

The literature holds that agility and resilience are abilities to adjust supply chains in line with changing market conditions (Browaeys & Fisser 2012; Carvalho, Duarte & Cruz-Machado 2011; Wieland 2013; Yauch 2011). This suggests that the dynamic capability approach is applicable to examine how agility and resilience affect sustainable supply chains. Moreover, agility and resilience are highly dependent on the network of interactions among supply chain partner firms (Baramichai, Zimmers Jr & Marangos 2007; Christopher & Peck 2004; Gligor & Holcomb 2014; Jüttner & Maklan 2011). These inter-firm relationships also depict the relevance of the social capital theory in developing a sustainable supply chain. The following section reviews these two theoretical concepts and their relevance to agility and resilience.

2.6.1 Dynamic capability perspective

Dynamic capability explains that, in changing environmental conditions, the competitive advantage of a firm relies on its ability to create, maintain and renew competitive bases (Eisenhardt & Martin 2000). The dynamic capability view, as originally developed by Teece, Pisano and Shuen (1997), focuses on fostering a

competitive advantage through firm-specific resources or competencies in situations where technology and market forces are rapidly changing. In particular, it determines the speed and the extent to which a firm adjusts its resources and competencies to align with market changes (Katkalo, Pitelis & Teece 2010; Wang & Ahmed 2007).

A capability implies something a firm is able to accomplish from the resources and routines on which it can draw (Eisenhardt & Martin 2000; Winter 2000). It represents the potential to change (Prieto & Easterby-Smith 2006). A definition of capability is that 'the organisation (or its constituent parts) has the capacity to perform a particular activity in a reliable and at least minimally satisfactory manner' (Helfat & Winter 2011, p. 1244). Capability is a function of the opportunities faced by firms and the resources available to the firms (Teece, Pisano & Shuen 1997). Accordingly, firm performance depends on the resources and the types of opportunities available. A capability has two aspects; namely, operational and dynamic (Helfat & Peteraf 2003). Operational capabilities entail performing an activity using a collection of processes and procedures that have a direct impact on a firm's output (Helfat & Peteraf 2003). Operational capabilities tend to retain a firm's current position, whereas dynamic capabilities build, integrate and reconfigure operational capabilities to achieve new resources under frequently changing market conditions (Helfat & Peteraf 2003; Teece 2007). Further, dynamic capabilities change a firm's current position to a more desirable one (Helfat & Winter 2011).

According to Teece, Pisano and Shuen (1997), dynamic capabilities are divided into three categories: managerial and organisational processes, position and paths. *Managerial and organisational processes* are the ways things are done in the firm, namely the routines or practices (Teece, Pisano & Shuen 1997). These processes have three roles: coordination/integration of internal and external activities, organisational and individual level learning and identification of needs for changes and accomplishing changes to organisational structures and assets accordingly (Teece, Pisano & Shuen 1997). *Position* reflects the specific assets a firm possesses, such as technology and other supporting elements that enable producing and delivering new products and services (Teece, Pisano & Shuen 1997). These supporting elements include finance, the firm's reputation, organisation structure, institutional setting and market conditions. *Paths* denote the strategic alternatives available to firms (Teece, Pisano & Shuen 1997). In fact, a firm's future position depends on its present position and the opportunities

available. Furthermore, its previous paths determine its present position (Teece, Pisano & Shuen 1997). Technological opportunities influence the industrial activities a firm is able to carry out, and another strategic alternative involves assessing the capacity to reconfigure and transform within the organisation (Teece, Pisano & Shuen 1997). Learning mechanisms alter which path the firm takes (Eisenhardt & Martin 2000). Accordingly, a firm's competitive advantage is vested in its managerial and organisational processes, which are influenced by its asset position and the paths it follows (Teece, Pisano & Shuen 1997). Dynamic capabilities, therefore, lie within managerial and organisational processes in terms of coordination or integration, learning and reconfiguration (Teece, Pisano & Shuen 1997) and can change its current position to reflect the firm's performance and competitive advantage, as well as lead to new positions and paths. Accordingly, Teece, Pisano and Shuen (1997) assumed organisational and management processes as the core elements of dynamic capability.

Teece (2007) furnishes particular types of dynamic capabilities that provide platforms for firms to evolve with market changes, such as sensing (opportunity identification), seizing (investment in opportunities) and managing transformation (resource reconfiguration). These are the main attributes needed by a firm to evolve along with such changes (Katkalo, Pitelis & Teece 2010). In terms of the dynamic capabilities of sensing and seizing drive new positions and paths for firms, they can improve performance and lead to competitive advantage (Teece 2007). Additionally, the capability of resource reconfiguration modifies the assets of the firm and presents sources of competitive advantage while developing new positions and paths (Teece, Pisano & Shuen 1997). Importantly, the processes identified by Teece, Pisano and Shuen (1997), namely, coordination, learning and assets or structural reconfiguration, are supportive of sensing, seizing and reconfiguring capabilities.

Another perspective of dynamic capability is that it is composed of adaptive, absorptive and innovative capabilities, as proposed by Wang and Ahmed (2007). They consider adaptive capability to flexibly align internal organisational resources with external market requirements. Absorptive capability is the attainment of external knowledge and transforming it for internal use (Wang & Ahmed 2007). Innovative capability refers to the ability to develop new products or markets by linking a firm's resources and capabilities (Wang & Ahmed 2007). Absorptive and innovative capabilities together

form sensing and seizing abilities, while adaptive capability represents the ability to reconfigure.

Dynamic capability, as posited originally by Teece, Pisano and Shuen (1997, p. 516), is the 'firm's ability to integrate, build, and reconfigure internal and external competencies to address rapidly changing environments'. According to this view, organisational and managerial processes, positions and paths collectively shape competencies in line with market changes, and thereby change the way in which firms operate at present (Helfat & Winter 2011). Competencies are organisational resources which result from repetitive or quasi-repetitive activities (Katkalo, Pitelis & Teece 2010). The dynamic capability view holds that difficult-to-replicate dynamic capabilities which are routine-based and highly tacit increase a firm's competitive advantage (Eisenhardt & Martin 2000; Teece, Pisano & Shuen 1997).

Difficult to replicate, routine-based dynamic capabilities highlight that firms must build such capabilities internally (Katkalo, Pitelis & Teece 2010). Dynamic capabilities evolve over time (Makadok 2001; Teece 2007). They are built on learning and deteriorate if they are unused for a long time (Helfat & Peteraf 2009). In rapidly changing market conditions, a firm frequently utilises dynamic capabilities to alter its assets, skills and competencies to develop and maintain a distinctive resource base within the firm to capitalise on environmental changes (Teece 2007). Dynamic capabilities should be continuously modified to improve existing capabilities or to create new capabilities under dynamic market conditions (Eisenhardt & Martin 2000). In such markets, dynamic capabilities create series of temporary advantages over competitors which provide a long-term competitive advantage (Eisenhardt & Martin 2000; Teece, Pisano & Shuen 1997).

With the move of market competition to the supply chain level from firm level, researchers brought in the idea of dynamic capabilities within the supply chain-level's competitive advantage (Cheng, Chen & Huang 2014; Defee & Fugate 2010; Kim, Suresh & Kocabasoglu-Hillmer 2013; Ponomarov & Holcomb 2009). They conclude that the dynamic capabilities reside in multiple firms and derive competitive advantage in supply chains (Beske 2012; Defee & Fugate 2010). In the supply chain context, dynamic capabilities are inter and intra-organisational competencies which create new static capabilities or modify the current capabilities of the supply chain members

(Cheng, Chen & Huang 2014; Defee & Fugate 2010; Gold, Seuring & Beske 2010). Consequently, dynamic capabilities hold the potential to address competitive advantage in supply chains. The following section reviews dynamic capabilities from a supply chain perspective, specifically incorporating agility and resilience.

2.6.2 Dynamic capabilities, agility and resilience in supply chains

Supply chain agility is the ability of firms to be responsive to market changes by adjusting production and coordinating with supply chain partners (Agarwal, Shankar & Tiwari 2007; van Hoek, Harrison & Christopher 2001; Yusuf et al. 2014b). Researchers have acknowledged supply chain agility as a dynamic capability (Blome, Schoenherr & Rexhausen 2013; Chiang, Kocabasoglu-Hillmer & Suresh 2012; Gligor, Esmark & Holcomb 2015; Gligor & Holcomb 2012a), which is the capability of organisational and managerial processes that is characterised by Teece, Pisano and Shuen (1997).

Throughout the literature, information sharing is seen as a vital component in agility (Christopher, Lowson & Peck 2004; Pereira, Christopher & Da Silva 2014). Firms capture market variations in a timely manner with shared information and demonstrate the sensing capability to seek out opportunities and threats (Gligor, Holcomb & Stank 2013; Yang 2014). The awareness of market changes, especially with regard to the market and customers, is enabled through integrated processes (Agarwal, Shankar & Tiwari 2006; Christopher 2000).

Integration of functional areas within the firm and among supply chain partners is a key attribute of agility (Braunscheidel & Suresh 2009; Tse et al. 2016). In particular, firms integrate business processes with partner firms (Agarwal, Shankar & Tiwari 2006; Christopher 2000; Yusuf et al. 2014a). Firms cooperate (align interests) and coordinate (align activities) with partner firms to integrate processes (Gligor & Holcomb 2012b). Learning also plays a significant role in integration since past experience is influential in deciding how to integrate processes with evolving opportunities and threats (Braunscheidel & Suresh 2009). Thus, it appears that the learning and process integration jointly delivers the seizing feature by identifying market changes.

Firms absorb changes by cooperating and coordinating with supply chain partner firms to develop new solutions to market requirements (Agarwal, Shankar & Tiwari 2007). Firms reconfigure resources in the supply chain; in fact, they modify supply chain

structures and alter supply chain resources flexibly and in a timely manner both upstream and downstream (Carvalho, Azevedo & Cruz-Machado 2012; Swafford, Ghosh & Murthy 2008). These adjustments may include changes in supplier quantities and supplier delivery times, reducing production schedules and batch sizes, and increasing delivery speeds and product developments (Carvalho, Azevedo & Cruz-Machado 2012; Goldsby, Griffis & Roath 2006; Swafford, Ghosh & Murthy 2008). Reconfiguration thus indicates the transforming behaviour and adapting capability.

Agility, therefore, possesses managerial and organisational processes supportive of dynamic capabilities such as coordination/integration, learning and reconfiguration, and also demonstrates the sensing, seizing and reconfiguring abilities. All these attributes warrant the assumption that agility is a dynamic capability.

These organisational and managerial processes in agility develop unique, dynamic capabilities for firms in the supply chain that increase firm performance and enable firms to remain competitive (Gligor & Holcomb 2012b; Liu et al. 2012; Tse et al. 2016). Instead of solely improving firm performance, these processes also indirectly derive competitive advantage. The resource reconfiguration modifies the assets available to firms (Teece, Pisano & Shuen 1997). The close interactions among firms that underpin the basis of agility also result in non-tangible assets such as social capital (Autry & Griffis 2008; Min, Kim & Chen 2008). By adapting existing processes to suit emerging opportunities in the market, firms alter their operations (Eisenhardt & Martin 2000). As a result, firms modify their competencies and address new opportunities or threats. Organisational and managerial processes in agility that develop new competencies and address market opportunities and threats represent new assets and paths for firms (Gligor & Holcomb 2012b).

The reliance on organisational structures and the development of non-tangible assets make it difficult for competitors to replicate agility (Gligor & Holcomb 2012b; Liu et al. 2012). Agility, therefore, provides a competitive advantage by integrating business processes and sharing information with supply chain partners (Liu et al. 2012). The ability to respond to dynamic market conditions by adapting resources to changing market conditions and the difficult-to-imitate nature of the capabilities (Teece 2007) adds to the argument that dynamic capability is appropriate to explain agility (Blome, Schoenherr & Rexhausen 2013; Chiang, Kocabasoglu-Hillmer & Suresh 2012; Gligor,

Esmark & Holcomb 2015; Gligor & Holcomb 2012a) and suggests how it influences sustainability in supply chains (Savitz & Weber 2013).

Resilience is the capability to prepare, respond and react to unexpected changes, and demonstrates a capability that is dynamic in nature. Features of resilience, such as readiness, response and recovery, reflect how firms in supply chains identify market disruptions and quickly adjust processes to address them. Researchers have, therefore, acknowledged resilience as a dynamic capability (e.g., Golgeci & Ponomarov 2013; Jüttner & Maklan 2011; Ponomarov & Holcomb 2009).

Firms re-engineer their supply chains to resist disruptions and to recover (Christopher & Peck 2004). Such re-engineering leads to modifications in supply chain structures to prepare and respond to changes. Also, it nurtures the flexibility in supply chains to switch between different product volumes and mixes to acquire responsiveness (Christopher & Peck 2004). The re-engineering demonstrates how supply chains transform and adapt. Particularly, it shows how they respond by restoring product flow to shift to a new desirable state or quickly return to a previous state. The shared information among supply chain partners triggers re-engineering (Christopher & Peck 2004). Firms collaborate to make decisions on how to respond to disruptive events and to re-engineer supply chains (Jüttner & Maklan 2011; Scholten, Scott & Fynes 2014), while they also learn from the previous incidents (Blackhurst, Dunn & Craighead 2011; Ponomarov & Holcomb 2009). The responses and recovery strategies are the articulations of this learning (Sáenz & Revilla 2014). The meaningful extractions of disruptive situations allow firms to formulate strategies to respond (Ponomarov & Holcomb 2009). The experience in learning builds distinctive response and recovery capabilities, which are difficult for others to replicate (Scholten & Schilder 2015). Collaboration, together with the knowledge management aspects of learning, is instrumental in seizing market opportunities. Furthermore, firms' innovativeness enables them to develop and adapt new processes to respond and recover to a stable state after disruptions (Golgeci & Ponomarov 2013). Such evidence demonstrates a firm's capabilities in identifying and adapting the supply chain quickly in response to disruptions.

The re-engineering of supply chain structures alters the existing operations and modifies the strategic alternatives (Christopher & Peck 2004). These mechanisms lead to the

improved competitiveness of businesses and ensure resilience as a dynamic capability (Ponomarov & Holcomb 2009). Subsequently, the dynamic capability view lays the groundwork for addressing how resilience enables sustainability in supply chains in rapidly changing markets.

Both agility and resilience as dynamic capabilities rely on inter-firm relationships and resource exchange among supply chain partners (Baramichai, Zimmers Jr & Marangos 2007; Christopher & Peck 2004; Gligor & Holcomb 2014; Jüttner & Maklan 2011). As a result, agility and resilience nurture trust and commitment among firms in supply chains (Nyaga, Whipple & Lynch 2010; Zacharia, Nix & Lusch 2009), thus indicating social capital development. Vasileiou and Morris (2006) noticed that the social capital developed through relationships between supply chain partners is critical in securing sustainability along the supply chain. These assertions led this study to employ social capital theory to explain the relationship of agility and resilience with sustainable supply chains.

2.6.3 Social capital

Social capital, as originally defined, is the resources received by actors in a network of relationships (Bourdieu 1986; Coleman 1988) by being members in groups (Bourdieu 1986). Thus, it is the connections between people that create obligations to develop social capital (Bourdieu 1986; Coleman 1988). Putnam (1993), in the context of government, and Coleman (1988), in the context of diamond markets, assert that social capital emerges as the expectation in return for a favour from one person to another. More relations increase the density of such credentials and influence raising social capital (Bourdieu 1986; Coleman 1988). Social capital is, therefore, associated with the number of social ties possessed by parties in the network (Burt 1992). It provides benefits collectively to all the parties connected to the network (Adler & Kwon 2002; Burt 1992; Coleman 1988).

Social capital appears in the forms of trust, norms and networks (Putnam 1993). There are different opinions for these forms as a source, effect or as the social capital itself. Putnam (1993) and Coleman (1988) stated that social capital and these forms are mutually reinforcing. In a group, actors are socialised and the actions within a group are shaped by norms, rules and obligations (Coleman 1988). Relations generate trust and expectation among parties, which in turn, create and enforce norms that regulate how

people behave (Coleman 1988). Norms create order in the expected behaviour (Adler & Kwon 2002) and social capital is beneficial through norms.

Coleman (1988) highlighted the applicability of social capital in explaining organisational behaviour in networks, even though the concept was originally conceived to describe the relations among social groups. According to the view of Coleman (1988), the actors are the organisations. Firms receive social capital from the aggregation of social capital among the people within the organisation. At the firm level, social capital is derived from the relationships within and between firms (Villena, Revilla & Choi 2011). Strong relationships among firms nourish trustworthiness and facilitate trade between organisations (Tsai & Ghoshal 1998). These relationships between firms enable the acquisition of resources, knowledge and information (Ahuja 2000).

An important feature of the social capital that enables market transactions is its convertibility to economic capital (Bourdieu 1986; Putnam 1993). This convertibility occurs mainly through human capital. People share information through the relationships, which speeds up the transactions and reduces the cost of the transactions (Coleman 1988; Putnam 1993). Human capital contributes to social capital through the medium of shared norms and beliefs (Adler & Kwon 2002). Social capital creates more productive human capital (Coleman 1988; Putnam 1993), even though the social capital is still productive in the absence of human capital (Coleman 1988).

Another aspect of social capital is closure, which represents the high connectedness of the parties in the network (Coleman 1988). Closure is developed through trustworthiness and is effective on norms (Coleman 1988; Putnam 1993). Those organisations with more networks are more effective (Ahuja 2000; Tsai & Ghoshal 1998), and the structure of the actors in the network and their positions determines the competitive advantage received by an actor (Adler & Kwon 2002). The elements of social capital are, therefore, the social structure and actions of the actors (Coleman 1988). The actors derive the benefits of receiving information earlier than an average receiver (Adler & Kwon 2002). Social capital is appropriable (Coleman 1988). The actors can, therefore, use the social ties generated in one setting for the purposes of other settings.

However, the social capital view has also been criticised (Villena, Revilla & Choi 2011). Maintaining strong relationships, as illustrated in social capital, is very costly (Adler & Kwon 2002). The strong relationships sometimes reduce firms' power and delay actions (Villena, Revilla & Choi 2011). Furthermore, norms developed by being highly embedded in a particular network prevent actors from receiving new ideas (Adler & Kwon 2002).

Weak ties (loose connections external to the network) are significant to social capital despite the main consideration being on strong ties (Burt 1997; Granovetter 1973). The weak ties are less costly to maintain as they do not require a high level of trust between parties (Adler & Kwon 2002; Granovetter 1973). They also provide access to information outside the network (Adler & Kwon 2002; Granovetter 1973). The weak ties offer accessibility to hard to reach vital information and a wide range of resources (Burt 1997; Granovetter 1973). Therefore, both strong and weak ties are significant to social capital.

The relationships in a supply chain represent the social capital of firms (Autry & Griffis 2008). Since a supply chain is a network of firms connected by relationships based on exchanging information and resources for the benefit of the supply chain, these firms better represent the actors in the network. This view is, therefore, applicable for a supply chain context despite its relatively sparse application in this area (Krause, Handfield & Tyler 2007). This explains how organisations interact with each other in supply chains (Hitt 2011; Ketchen Jr & Hult 2007). The notion of social capital posits that relationships among organisations deliver assets to firms that provide a competitive advantage (Adler & Kwon 2002). Accordingly, firms invest in relationships with actors in the network so as to obtain the access to resources which, in turn, provide an economic return (Autry & Griffis 2008).

Min, Kim and Chen (2008, p. 286), who extended the original view of social capital to the supply chain context, defined social capital as the 'set of social resources embedded in the relationships within a supply chain'. They argue that social capital in supply chains includes relationships, as well as the interactions and the processes derived through interactions among firms. Accordingly, social ties among supply chain firms develop social capital, which is attributed to sharing information between firms and is conducive to collaborations (Autry & Griffis 2008; Min, Kim & Chen 2008). Those

firms with high relational capital perform well in execution-oriented performance, whereas those that are high in structural capital perform best in areas that need access to non-redundant and new information (Autry & Griffis 2008; Min, Kim & Chen 2008).

Attributes of social capital, such as nurturing trust, norms, and obligation for firms, can create shared visions for supply chain partners (Min, Kim & Chen 2008; Tsai & Ghoshal 1998). Consequently, social capital provides a basis to explain how agility and resilience enable a firm to develop a sustainable supply chain.

2.7 Gaps in the literature

The literature reviewed in this chapter has uncovered theoretical gaps present in studies of sustainable, agile and resilient supply chains. First, this chapter established the need for agility and resilience as dynamic capabilities in developing sustainable supply chains. Even though the supply chain literature has identified agility and resilience as dynamic capabilities, vital for the development of sustainable supply chains (e.g., Bals & Tate 2016; Fiksel, Goodman & Hecht 2014; Savitz & Weber 2013), there has been no empirical examination of the impact of agility and resilience on sustainability in supply chains.

Second, this study brings the social capital theory to explain the impact of agility and resilience as dynamic capabilities on sustainable supply chains. Notwithstanding that agility and resilience are predominately developed based on the relationships between supply chain partners that could build social capital, only one supply chain resilience study has considered this perspective (e.g., Johnson, Elliott & Drake 2013). Furthermore, sustainable supply chain studies have overlooked social capital, except one notable exception by Vasileiou and Morris (2006).

Third, supply chain studies have acknowledged their vulnerability to market uncertainties and proposed agility as a strategy to cope (e.g., Blome, Schoenherr & Rexhausen 2013; Braunscheidel & Suresh 2009; Gligor, Holcomb & Stank 2013; Yusuf et al. 2014a). While many studies have acknowledged that stakeholder requirements of sustainability create market volatilities (e.g., Beske 2012; Foerstl et al. 2010; Gualandris et al. 2015; Meixell & Luoma 2015), agile supply chain studies have failed to consider its impact on sustainability. This study will bring this idea to the agile supply chain

literature by examining its impact on developing sustainability practices in supply chains.

Fourth, the current scope of resilience in supply chain studies is to prepare, respond, recover and grow in the context of disruption. This study expands this scope to cover minimising the causes that lead to extended or long-term disruptions.

Finally, the present agile and resilient supply chain examinations are focused on economic performance, notably in relation to financial, market and operational performance. The studies in these areas have not investigated the sustainability context. Furthermore, many sustainable supply chain studies have examined only a single dimension of sustainability and very few studies have investigated all three dimensions in a single research setting. In order to bridge this gap, this study adopts sustainability from all three sustainability dimensions.

This study broadens the concept of resilience and expands the application of dynamic capability and social capital in supply chain studies, while it also advances the scope of agility and resilience to include sustainability. It will further contribute empirically to the field by examining this in manufacturing supply chains in Australia.

2.8 Topics covered in the study

Table 2.1 provides a summary of the topics that will be included and excluded in this study from the areas discussed in this chapter.

Table 2.1 Summary of the topics covered in the study

Topic	Included	Excluded
Social sustainability practices		
Internal social sustainability practices		
Human rights	x	
Health and safety	x	
Employee skills development	x	
External social sustainability practices		
Fair trade		x
Supplier management	x	
Corporate philanthropy	x	
Environmental sustainability practices		
Internal environmental sustainability practices		
Green manufacturing	x	
Internal environmental management	Only environmental management systems	

Continued on next page

Table 2.1 Continued

Topic	Included	Excluded
External environmental sustainability practices		
Green purchasing	x	
Collaboration with suppliers	x	
Collaboration with customers	x	
Eco-design	x	
Reverse logistics	x	
Economic sustainability in supply chains		
Sales	x	
Market share	x	
Profits	x	
Return on investments	x	
Operational performance		x
Sustainability in the long term addressing global societal concerns		x
Inter-dependency of sustainability dimensions	x	
Agile supply chains		
Supply chain agility	x	
Responsiveness	x	
Types of changes	x	
Speed of responses	x	
Appropriate solutions		x
Processes to detect changes and reconfigure resources	x	
Supply chain resilience		
Continue functioning during disruptions	x	
Respond and recover from damages	x	
Growth after disruptions		x
Prepare for disruptions	x	
Identify critical paths in supply chains		x
Collaborate with supply chain partners	x	
Minimise long-term disruptions	x	
Dynamic capabilities		
Managerial and organisational processes, positions and paths	x	
Sensing, seizing and managing transformation	x	
Adaptive capability	x	
Absorptive capability		x
Innovative capability		x
Social capital		
Resources received by actors in a network	x	
Strong ties	x	
Weak ties		x
Trust	x	
Norms	x	
Obligation	x	
Human capital		x
Closure	x	

2.9 Chapter summary

This chapter reviewed the literature in sustainable, agile and resilient supply chains. The purpose of this chapter is to identify the gaps and limitations in previous studies.

This literature review has revealed three main themes with regard to sustainable supply chains.

1. Sustainability is the performance across all three dimensions of social, environmental and economic perspectives.
2. Sustainable practices in supply chains concentrate on activities within the firm that create internal sustainable operations and those that extend to the supply chain partners helping them to develop sustainability.
3. Implementing sustainability practices necessitates capabilities of a dynamic nature.

The review of agile supply chain studies highlights three main themes:

1. An agile supply chain is a collection of firms in the supply chain that are individually agile. Supply chain studies have mainly focused on agility at the organisational level. At the organisational level, agility enables firms to be responsive whilst ensuring the entire supply chain is agile. The most frequently used terminology, therefore, is supply chain agility.
2. Supply chain agility is a dynamic capability.
3. Agility is responsiveness to unpredictable supply and demand changes.

The literature in resilient supply chains also raised two themes.

1. Resilience is the ability to recover from sudden, disruptive market conditions. This theme, minimising causes of sudden changes and disruptions, provides a link to sustainability.
2. Resilience is also attributable to a dynamic capability.

As discussed, sustainability, agility and resilience in supply chains converge through dynamic capabilities. Furthermore, anecdotal evidence in sustainable supply chain

studies has pointed to the link between agility, resilience and sustainability, but this relationship is yet to be explored.

In summary, sustainable, agile and resilient supply chains are imperative for present day businesses. Agile and resilient features are enablers of sustainability. Even though previous studies have examined these aspects in isolation, the collective effect of agility and resilience on sustainability has not yet been examined. Overall, a framework and the mechanisms of achieving sustainability with agility and resilience are not evident in the literature and lack empirical investigation. This study advances the theory in sustainable supply chains to integrate agility and resilience. It also addresses the call for more empirical evidence to support agility and resilience as a condition of sustainability in supply chains. The next chapter develops a conceptual framework and a list of hypotheses to explore how agility and resilience are related to each of the sustainability dimensions based on the gaps identified in this chapter.

3 Theoretical framework and hypotheses

3.1 Introduction

Chapter 2 explored the concepts of sustainability, agility and resilience in the context of supply chains. It established that supply chain agility is the ability to respond to market changes. The review also highlighted that resilience represents the potential to withstand changing market conditions while mitigating risks from unforeseen circumstances. It was also established in Chapter 2 that a relationship exists between supply chain agility, resilience and sustainability.

A gap in the literature was identified from the examination of the relationship between agility, resilience and sustainability. In particular, no studies have so far empirically examined how agility and resilience, as dynamic capabilities, influence sustainability despite the perceived relevance of such capabilities to supply chains in dynamic markets. This study explores this research gap to develop an understanding about the impact of agility and resilience on sustainability in supply chains.

The chapter introduces a theoretical framework and develops hypotheses for empirical investigation. The study will draw from the dynamic capability view and social capital theory. The next section presents the focus of this study. The chapter concludes by providing a summary of the framework and hypotheses.

3.2 Focus of research

An important issue in sustainable supply chain literature is how to implement practices that drive a sustainable supply chain. The studies that have examined sustainable supply chain development have highlighted supply chain practices and capability-based approaches, yet the area is still in its infancy, with only a handful of conceptual (e.g., Beske 2012; Beske & Seuring 2014) and empirical investigations (e.g., Beske, Land & Seuring 2014; Pagell & Wu 2009). Agility and resilience have been advocated as

capabilities appropriate for dynamic markets but so far their impacts on sustainability have not been empirically examined. Since agility and resilience involve major business decisions on supply chain structure, their influence on sustainable supply chains is an important area for investigation.

The dynamic capability view provides a paradigm of firm-specific capabilities and the manner in which competences are reconfigured to respond to shifts in the business and supply chain environments. Similarly, the social capital theory can explain how the relationships built through agility and resilience collectively deliver resources that foster sustainability in supply chains. This study will draw upon these theories to investigate the impact of agility and resilience on sustainability. It considers the integrative approach to sustainability by examining the triple bottom line in a research setting, and will initially explore the factors that enable supply chain agility and resilience. After that, it will examine the impact of agility and resilience on the sustainability of the firms in supply chains within the Australian manufacturing sector.

3.3 Research questions

The aim of this research is to examine the influence of supply chain agility and resilience on sustainability in supply chains in the manufacturing sector. The research will explore the attributes of agile, resilient and sustainable supply chains and test the impact of agility and resilience on sustainability. The central research question for this study is:

How do agility and resilience affect the sustainability of firms in the supply chain in the Australian manufacturing sector?

3.4 The manufacturing sector in Australia

According to the Australian and New Zealand Standard Industrial Classification (ANZSIC), manufacturing entails diverse activities and products, ranging from low value-added commodity products to high precision products such as automotive products, medical devices and pharmaceuticals (Australian Bureau of Statistics (ABS) 2016a). The manufacturing units are described as plants, factories or mills. These units transform inputs into new products using power-driven machinery and material-handling equipment, or by hand. The assembly of component parts for producing a new product is also considered as manufacturing (ABS 2016a). Between 2014 and 2015, the

Australian manufacturing sector consisted of 286,000 small, 260,000 medium-sized and 311,000 large operators (ABS 2016b). The manufacturing sector provided employment to 856,000 people in 2014/15 and contributed to 7.4 percent of employment in the country (Department of Industry, Innovation and Science 2015). Furthermore, it contributed 6.2 percent towards Australia's Gross Domestic Product and accounted for 37.8 percent of exports in 2014/2015 (Department of Industry, Innovation and Science 2015). However, exports decreased by 1.3 percent in 2015 (Office of the Chief Economist 2015). The relative contribution of the manufacturing sector to the country's employment dropped from being the second highest position in 2006/07 to the sixth highest in 2014/15 (ABS 2016c).

The manufacturing sector as a whole has faced a downward trend in performance over the past two decades and is expected to decline further (Kryger 2014). The sector is in a disadvantageous position due to factors such as slow growth in productivity, less competitive exports, the rising dollar value, smaller domestic market, high competition from imports (Prime Minister's Manufacturing Taskforce 2012) and the inability to manage complex supply chains arising from globalisation (CSIRO Future Manufacturing Flagship Sustainable Manufacturing Initiative 2012).

Nevertheless, the manufacturing sector is still important in maintaining the economic stability of the nation (Prime Minister's Manufacturing Taskforce 2012). The sector is a significant component in the value chains of other Australian industries such as services, transport, infrastructure and agribusiness (CSIRO Future Manufacturing Flagship Sustainable Manufacturing Initiative 2011; Prime Minister's Manufacturing Taskforce 2012). CSIRO Future Manufacturing Flagship Sustainable Manufacturing Initiative (2012) and the Future Manufacturing Industry Innovation Council (2011) indicated the need to build capabilities in agility to regain the competitiveness of the Australian manufacturing sector. They emphasised the importance of managing supply chains effectively to capture market opportunities and adding value to products (CSIRO Future Manufacturing Flagship Sustainable Manufacturing Initiative 2012; Future Manufacturing Industry Innovation Council 2011). In particular, Australian manufacturers should adapt to market movements in high-tech, service-oriented and eco-efficient production. Partnerships developed in supply chains allow firms to develop the required flexibility and enable them to identify opportunities in new markets (Future Manufacturing Industry Innovation Council 2011). Maintaining an

emphasis on business innovation is imperative to remaining competitive, and requires the ability to recognise market changes, understand customer needs and exploit opportunities by integrating external knowledge (CSIRO Future Manufacturing Flagship Sustainable Manufacturing Initiative 2012). These factors highlight the importance of a more agile approach for the Australian manufacturing sector.

Australia frequently experiences disasters such as bushfires, floods and storms (Council of Australian Governments 2011). These events have led to supply chain breakdowns due to consequent disruptions to production facilities and transport systems (Bartos et al. 2012; National Sustainability Council 2013). These events provide evidence of how sudden changes can impair supply chain operations in the manufacturing sector in Australia. For example, production facilities in Queensland have experienced frequent shut-downs during floods, especially in 2010 and 2011, resulting in millions of dollars in losses for the firms (Bartos et al. 2012). Supply chains should have the ability to speedily recover from these disruptions. The need for resilience is more significant now than ever, due to the rising trend of such disruptive incidents (Sáenz & Revilla 2014).

Sustainability-related issues are predominant in the manufacturing sector in Australia. At present, the sector accounts for the highest proportion of greenhouse gas emissions in the country (CSIRO Future Manufacturing Flagship Sustainable Manufacturing Initiative 2011) and Australia's per capita greenhouse gas emission is higher than those of other developed countries (National Sustainability Council 2013). The government has imposed environmental regulations and product stewardship programmes on certain industries (such as rubber tyres and computer screens) to increase recycling (CSIRO Future Manufacturing Flagship Sustainable Manufacturing Initiative 2011; National Sustainability Council 2013). These industries need to consider resource-efficient products and product life cycle assessment across their supply chains (CSIRO Future Manufacturing Flagship Sustainable Manufacturing Initiative 2012). In addition, demand from consumers and the public for environmentally and socially responsible products and services is increasing (CSIRO Future Manufacturing Flagship Sustainable Manufacturing Initiative 2011; Future Manufacturing Industry Innovation Council 2011). Australian manufacturers currently under-perform in sustainability initiatives when compared to the other developed nations, suggesting the need for more attention in this area to increase the competitiveness of the sector (CSIRO Future Manufacturing Flagship Sustainable Manufacturing Initiative 2012). Sustainability is fast becoming an

important concern for stakeholders in the manufacturing sector. Within this context, sustainability, agility and resilience are essential attributes of manufacturing supply chains in Australia. This study will explore the central research question through posing three sub-questions:

1. What are the attributes of supply chain agility and resilience in firms in the Australian manufacturing sector?

2. What sustainability practices are present in firms in the Australian manufacturing sector?

3. What are the impacts of agility and resilience on the three dimensions of sustainability (social, environmental and economic) in firms in the supply chain in the Australian manufacturing sector?

This chapter develops the theoretical framework which explains the impact of agile and resilient attributes on sustainability in supply chains. Furthermore, it proposes a set of hypotheses, particularly to address the third research sub-question. The following section presents the theoretical underpinning and details the process of developing the hypotheses.

3.5 The theoretical framework

The literature review in Chapter 2 established that sustainability in supply chains is linked with supply chain agility and resilience. The proposed theoretical model captures this view and proposes that supply chain agility and resilience enable sustainability of firms in the supply chain. These variables form a model for discerning how supply chain agility (hereafter referred to as agility in the hypotheses of this chapter, constructs in Chapter 4 and statistical analyses in Chapter 6) and resilience can impact on a firm's sustainability practices. Figure 3.1 illustrates the theoretical framework of this study.

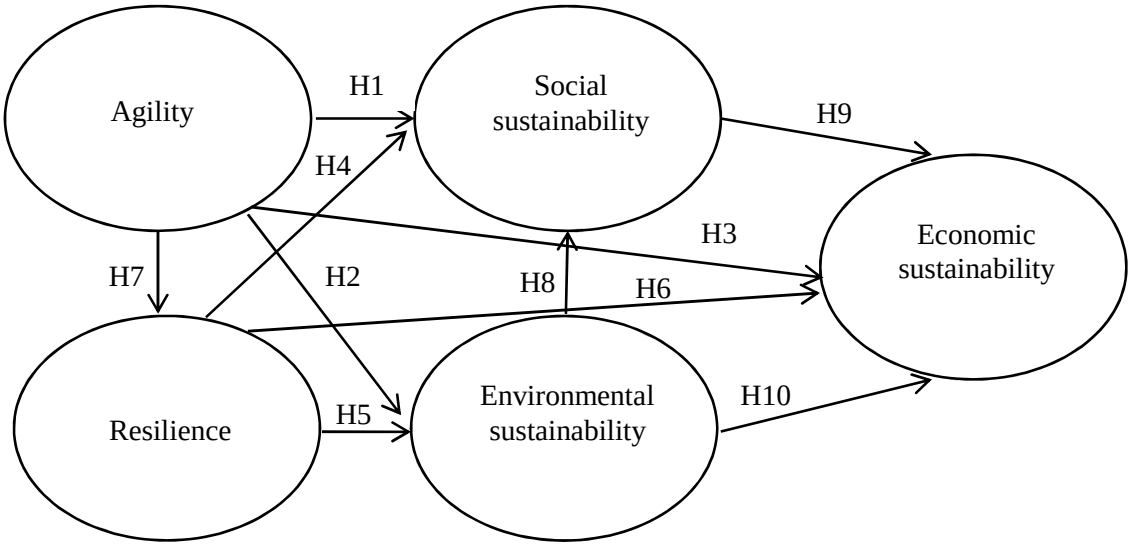

Figure 3.1 Theoretical framework linking agility, resilience and sustainability in firms in the supply chain

This framework is grounded in the dynamic capability view and social capital theory. The dynamic capability view recognises a firm's ability to change resources and competencies to be in line with market changes (Eisenhardt & Martin 2000; Teece, Pisano & Shuen 1997). Such capabilities are essential for sustainable supply chains (Beske 2012; Beske, Land & Seuring 2014). Agility and resilience as firm-level dynamic capabilities (Blome, Schoenherr & Rexhausen 2013; Gligor & Holcomb 2012b; Gligor, Holcomb & Stank 2013; Golgeci & Ponomarov 2013; Jüttner & Maklan 2011) and their abilities to bring social capital to the supply chain (Johnson, Elliott & Drake 2013; Yang 2014) provide the basis of this research.

Agile firms detect market changes and respond to them by manipulating resources (Blome, Schoenherr & Rexhausen 2013; Gligor, Esmark & Holcomb 2015). Resilience can enable firms to respond and recover from sudden changes and slow and long-term disruptions by reconfiguring resources (Jüttner & Maklan 2011; Nils-Ole et al. 2015; Tukamuhabwa et al. 2015). Both agility and resilience imply unique firm-level capabilities which are difficult for competitors to replicate. Stakeholder requirements for sustainability can change in a rapid and unpredictable manner (Beske 2012; Foerstl et al. 2010; Gualandris et al. 2015; Meixell & Luoma 2015). Firms with agile and resilient capabilities are, therefore, better able to understand changing sustainability needs in markets and respond to them.

The social capital theory explains how firms receive access to and leverage resources, and how the actions of firms are controlled through relationships (Matthews & Marzec 2012; Villena, Revilla & Choi 2011). Firms that demonstrate supply chain agility are highly integrated and connected through shared information (Agarwal, Shankar & Tiwari 2007; Christopher 2000). Supply chain agility enables coordination and integration of various parties and functions along the supply chain by aligning their collective capabilities efficiently and effectively to address market changes (Braunscheidel & Suresh 2009; Gligor & Holcomb 2012b; Ngai, Chau & Chan 2011). In a resilient supply chain, firms immediately initiate responsive actions in collaboration with other firms (Christopher & Peck 2004; Jüttner & Maklan 2011; Scholten & Schilder 2015). Firms also collaborate when they prepare their supply chains to minimise disruptions caused by sudden or long-term changes (Winston 2014). Firms build these capabilities through information and knowledge sharing mechanisms with each other (Christopher & Peck 2004; Pereira, Christopher & Da Silva 2014). These high interactions among firms in agile and resilient supply chains develop commitments for the firms to work towards a common objective (Krause, Handfield & Tyler 2007; Tsai & Ghoshal 1998). As a result, both agility and resilience represent social capital among firms in supply chains, and the accumulation of social capital develops trust and enforces norms in the supply chain (Coleman 1988; Putnam 1993).

In a sustainable supply chain, firms act in a socially and environmentally sustainable manner (Ahi & Searcy 2013; Ashby, Leat & Hudson-Smith 2012). Firms cooperate with supply chain partners to implement sustainability practices (Seuring & Müller 2008b; Wittstruck & Teuteberg 2012). Developing sustainability practices in other firms in the supply chain is dependent on the trust and understanding developed through relationships among firms (Gualandris, Golini & Kalchschmidt 2014). Consequently, social capital can explain how firms identify sustainability requirements and implement relevant practices collectively in the supply chain.

This study links agility and resilience with sustainability in supply chains with the theoretical underpinning that both agility and resilience are dynamic capabilities. They enhance social capital and facilitate sustainability efforts in supply chains. The study examines the impacts of agility and resilience on all three dimensions of sustainability (social, environmental and economic) individually. This study also posits that social and environmental sustainability enables economic sustainability. In addition, the learning

acquired through detecting and responding to regular market fluctuations develops skills and abilities to identify and react to sudden and long-term market variations (Braunscheidel & Suresh 2009). With this notion, this framework proposes that agility enables resilience. Furthermore, environmental sustainability facilitates the wellbeing of wider society (Gopalakrishnan et al. 2012; Hutchins & Sutherland 2008). Thus, this framework proposes that environmental sustainability enables social sustainability.

3.6 Development of hypotheses

The hypotheses enquire into the relationships among the constructs of the theoretical framework. Ten hypotheses are presented for the empirical investigation of firms in the Australian manufacturing supply chains.

3.6.1 Agility

Agility is the ability to detect market changes (Gligor & Holcomb 2012a; Yusuf et al. 2014a). The stakeholders signal to firms the types of sustainability practices they expect in supply chains (Gualandris & Kalchschmidt 2014; Sharma & Henriques 2005). The abilities to recognise and understand the changes in stakeholder requirements and the social, environmental and economic factors are important to develop sustainable supply chains (Bals & Tate 2016). The understanding of the sustainable practices at the supply chain partner firms helps firms to determine the type of sustainability practices to initiate within their firms and in their supply chains (Carter & Jennings 2004; Faisal 2010; Gualandris, Golini & Kalchschmidt 2014; Koplin, Seuring & Mesterharm 2007). Agility, therefore, provides a basis for capturing sustainability-related information.

Agility can reconfigure internal and external resources in response to market changes (Bottani 2010; Charles, Lauras & Wassenhove 2010; Li et al. 2008; Lin, Chiu & Chu 2006; Yusuf et al. 2004). Integrating sustainability initiatives requires changes in processes and supply structures (Koplin, Seuring & Mesterharm 2007; Pagell & Wu 2009). For instance, supplier development results in modifications to the production processes in the suppliers' sites (Faisal 2010; Gualandris, Golini & Kalchschmidt 2014). Firms will terminate contracts with supply chain partners who violate sustainability standards and form contracts with new partners that can adhere to sustainability requirements (Foerstl et al. 2010). For example, Welford and Frost (2006) found that some of the Asian firms in their study had discontinued supplier contracts after warning

them about their non-compliance on sustainability issues. Furthermore, managing suppliers for sustainability might incur reductions in the number of suppliers (Gualandris, Golini & Kalchschmidt 2014). The capability of agility to reconfigure internal and external resources is, therefore, conducive to implement sustainability practices.

To initiate sustainability activities, firms leverage the skills of supply chain partners both upstream (Green Jr et al. 2012a; Gualandris, Golini & Kalchschmidt 2014) and downstream (Beske & Seuring 2014; Sancha et al. 2015). For instance, they collaborate with supply chain partners to share information and manage supply chains for social and environmental risk (Gualandris & Kalchschmidt 2014; Mani et al. 2016; Vasileiou & Morris 2006). These collaborative initiatives include joint efforts in reducing waste, logistics activities, product designs, process modification and labour relations (Park-Poaps & Rees 2010). The implementation of these practices requires a shared vision among supply chain partners and the willingness and commitment to support sustainability initiatives (Tate & Bals 2016; Vachon & Klassen 2008). Agility as a source of inter-firm relationships and the goal congruence among supply chain partners to respond to market changes (Agarwal, Shankar & Tiwari 2006; Baramichai, Zimmers Jr & Marangos 2007; Gligor & Holcomb 2012b ; Gligor & Holcomb 2014) can, therefore, enhance sustainability efforts.

A clear understanding of stakeholder requirements for social sustainability is essential for instilling social sustainability practices in the supply chain (Mani, Agrawal & Sharma 2015). For example, identifying stakeholder pressures concerning health, safety and labour practices is important in determining relevant employee-related activities (Awaysheh & Klassen 2010; Klassen & Vereecke 2012). These information capturing mechanisms are essential for detecting social sustainability-related requirements.

The implementation of social sustainability practices requires resource reconfiguration. For instance, the development of community welfare activities incorporates the creation of relationships with new partners and stakeholders (Klassen & Vereecke 2012). Managing suppliers for social sustainability alters supply bases (Gualandris, Golini & Kalchschmidt 2014). Firms terminate relationships with those that cannot meet social requirements and network with new socially sustainable partners in operating their

supply chains (Harms, Hansen & Schaltegger 2013). The ability to reconfigure supply chain structures is vital to implement socially sustainable practices.

To implement social sustainability practices in supply chains, inter-firm relationships among supply chain partners are important as they build social capital among buying and supplying firms (Krause, Handfield & Tyler 2007; Tsai & Ghoshal 1998). For example, the high dependency on customer firms influences focal firms to adopt socially responsible supply practices (Awaysheh & Klassen 2010). A common understanding with suppliers is required to implement control mechanisms that govern suppliers' socially sustainable practices (Mamic 2005). The trust developed in buyer-supplier relationships encourages supply chain partners to adapt to social sustainability requirements (Sancha et al. 2015). Thus, stronger relationships lead firms working with supply chain partners to develop their social sustainability (Foerstl et al. 2010).

Agility gives firms the ability to detect changes, reconfigure resources, and also acts as a basis for building social capital; moreover, it provides a strong foundation for the implementation of social sustainability practices in the supply chain. It is, therefore, hypothesised that:

H1: Agility has a positive association with social sustainability for firms operating in Australian manufacturing supply chains.

To implement environmental practices, firms need to understand the stakeholders' expectations of the environmental practices (Lee & Klassen 2008; Sarkis, Gonzalez-Torre & Adenso-Diaz 2010; Simpson, Power & Samson 2007; Zhu, Sarkis & Lai 2013). In addition, the information about the environmental practices at supply chain partners is important to understand the types of environmental practices that can be implemented. For instance, information about suppliers' environmental practices is important in implementing practices such as eco-design and green purchasing (Koplin, Seuring & Mesterharm 2007; Liu, Srai & Evans 2016; Lo 2014; Shi et al. 2012). In addition, this information helps to determine supplier development activities (Ateş et al. 2012; Bai, Sarkis & Wei 2010). Information about downstream firms, such as layouts of warehouses, logistics routines and transportation modes (Rao & Holt 2005) assists firms in developing activities to reduce greenhouse gas emissions in downstream supply chain partners. Agility as an ability to capture information, therefore, demonstrates its relevance to improving environmental sustainability.

Firms reconfigure supply chain resources in implementing environmentally sustainable practices. For instance, green manufacturing introduces energy efficient processes and waste reduction techniques in production facilities, which require adjustments in manufacturing technologies (Carbone & Moatti 2008; Rusinko 2007). Green purchasing alters supply management by setting selection criteria relating to environmentally friendly materials and processes (Carbone & Moatti 2008; Shi et al. 2012). Environmentally friendly designs include changes in packaging and distribution channels (Kumar, Teichman & Timpernagel 2012). Reverse logistics requires adjustments in product designs and processes to support recycling and the reverse flow in supply chains (Sarkis, Helms & Hervani 2010). Accordingly, the implementation of environmental practices requires resource reconfiguration within individual firms and in the overall supply chain structure.

Furthermore, implementing environmental practices necessitates high levels of inter-firm relationships among supply chain partners. With strong relationships, firms are obliged to comply with environmental practices and exchange knowledge and resources to implement these practices (Hung, Chen & Chung 2014; Tate, Ellram & Gölgeci 2013). Firms collaborate with supply chain partners to help them improve their environmental sustainability practices (Gimenez & Tachizawa 2012; Seuring & Müller 2008b; Vachon & Klassen 2006). In addition, goal congruence among supply chain partners is important to draw their support for sustainability initiatives (Kogg & Mont 2012; Liu, Srai & Evans 2016). For example, environmentally friendly innovations in supply chains are dependent on creating shared values and collaboration with suppliers (Mylan et al. 2015). The practice of reverse logistics depends on the support of supply chain partners for the reverse flow of items (Sarkis 2001). Agility, as networks of interconnected partner firms, demonstrates its relevance for implementing environmental sustainability in supply chains.

Firms with supply chain agility readily recognise market changes that will require environmental obligations and pursue pollution prevention, eco-design and partner development initiatives that lead to improved environmental sustainability. Agility develops social capital with the trust, norms and values shared through inter-firm relationships. This social capital facilitates establishing environmental criteria for business transactions and collaborative efforts in environmental activities in supply chains. It is, therefore, hypothesised that:

H2: Agility has a positive association with environmental sustainability for firms operating in Australian manufacturing supply chains.

Firms with supply chain agility work closely with partners to detect real-time fluctuations in demand, supply and other market factors (such as new technology and competition) (Gligor & Holcomb 2012b; Swafford, Ghosh & Murthy 2008). Firms coordinate and integrate business processes within the supply chain to address market changes (Gligor & Holcomb 2012b; Ngai, Chau & Chan 2011). Focal firms are, therefore, able to synchronise and reconfigure internal functions with the external resources in the supply chain in a timely and flexible manner (Blome, Schoenherr & Rexhausen 2013; Swafford, Ghosh & Murthy 2006a). Consequently, these activities provide customised solutions with a much faster delivery time that results in better firm performance in terms of improved market share, returns on investment, profit and competitiveness (Khan et al. 2009; Swafford, Ghosh & Murthy 2008; Yusuf et al. 2014a). Agility, therefore, enhances economic sustainability.

These inter-organisational relationships in agility enable firms to cope with competition. The trust developed helps them to meet the expectations of the other firms and avoid opportunistic behaviours (Dyer & Singh 1998; Skjoett-Larsen 1999). As a result, the need for formal evaluation processes is reduced and transaction costs are decreased (Krause, Handfield & Tyler 2007; Matthews & Marzec 2012; Skjoett-Larsen 1999). Supply chain agility, therefore, delivers unique capabilities and social capital to the firms connected in the supply chain; these attributes can be used in rent creation (Blome, Schoenherr & Rexhausen 2013; Gligor & Holcomb 2012b; Qrunfleh & Tarafdar 2013).

Studies have shown that agility directly improves market and financial performance (e.g, Qrunfleh & Tarafdar 2013; Tse et al. 2016). Yang (2014) noted that agility improves economic and operational performance by achieving cost efficiency. It is, therefore, hypothesised that:

H3: Agility has a positive association with economic sustainability for firms operating in Australian manufacturing supply chains.

3.6.2 Resilience

Resilience reduces the risk of disruptions (Chopra & Sodhi 2014). Since suppliers are potential sources of risk, firms work with suppliers to minimise supply disruptions (Foerstl et al. 2010; Krause, Vachon & Klassen 2009; Zsidisin & Wagner 2010). To prevent reputational damages, firms engage in supplier selection and evaluation activities (Reuter et al. 2010) and collaborate with other supply chain partners to improve operational standards (Harms, Hansen & Schaltegger 2013; Lee 2010). In order to minimise disruptions caused by long-term changes, firms develop more socially and environmentally friendly business solutions that diffuse sustainability improvements along the supply chain (Winston 2014). While strengthening resilience, these activities improve the sustainability activities of partner firms.

Firms in resilient supply chains respond promptly to disruptions (Blackhurst, Dunn & Craighead 2011; Ponomarov & Holcomb 2009) caused by sustainability-related issues and sudden changes in markets. Any breaches in sustainable practices are rectified by managing or redesigning supply chain structures (Foerstl et al. 2010; Wolf 2014). Such incidents are alleviated through switching to new supply chain partners, providing training, sharing knowledge, and specifying codes of conduct and standards of practices for supply chain partners (Harms, Hansen & Schaltegger 2013; Wolf 2014). In recovering from sustainability-related disruptions and preparing for future possible changes, focal firms support upstream and downstream firms to implement more sustainable practices (Lee 2010). These collaborative efforts develop social capital among firms and provide a commitment to sustainability efforts (Johnson, Elliott & Drake 2013). In this manner, firms improve sustainability in their supply chains by responding to and recovering from damages.

Resilience influences positive social sustainability outcomes in the supply chain. For example, in preparing for possible disruptions, firms maintain multiple production facilities and rely on multiple suppliers (Chopra & Sodhi 2014; Jüttner & Maklan 2011; Tukamuhabwa et al. 2015). These activities create employment opportunities for the community. Firms cooperate with supply chain partners to implement sustainability practices to minimise strikes and boycotts occurring upstream (Foerstl et al. 2010; Reuter et al. 2010) and downstream (Mani et al. 2016; Vachon & Klassen 2006). In particular, firms enhance knowledge and skills of supply chain partners to accommodate risks and to recover when there is a disruption in the supply chain (Blackhurst, Dunn &

Craighead 2011; Nils-Ole et al. 2015). Firms assess supply chain partners for their social sustainability involving human rights, labour practices, gender discrimination, working conditions and ethical business conduct to minimise disruptions (Mani, Agrawal & Sharma 2015; Marshall et al. 2015b). Firms assess these practices using codes of conduct and certifications such as ISO 26000, OHSAS 18001 and International Labour Organisation (ILO) guidelines (Mani, Agrawal & Sharma 2015; Marshall et al. 2015b). These assessments ensure social sustainability practices in the supply chain.

Firms improve social sustainability when overcoming disruptions. In particular, they collaborate with partners to improve their social performance (Gualandris, Golini & Kalchschmidt 2014; Sancha et al. 2015). For example, the actions of Nike in the 1990s to recover from the market disruptions caused by allegations related to suppliers included improving labour conditions and human rights in their supply chain. This was achieved by helping supply chain partners to advance social sustainability practices and insisting on the suppliers making these changes as the main criterion in purchasing decisions (Lee 2010). Furthermore, firms that successfully responded to and recovered from disruptions communicate their learning and response strategies with the other firms (Blackhurst, Dunn & Craighead 2011). This activity also reflects the socially responsible behaviour of the firm. The recovery process has, therefore, resulted in social sustainability improvements along the supply chain.

Recovery from disruptions is often associated with social capital development (Johnson, Elliott & Drake 2013), which is favourable to initiate social sustainability practices in supply chains. Accordingly, resilience assists organisational and management processes to engage in proactive and reactive social sustainability activities, accumulating social capital among firms. The following hypothesis is, therefore, proposed:

H4: Resilience has a positive association with social sustainability for firms operating in Australian manufacturing supply chains.

Firms in resilient supply chains engage proactively in sound environmental practices (Aragon-Correa & Sharma 2003; Ateş et al. 2012; González-Benito & González-Benito 2005). To minimise disruptions that lead to reputation loss, firms assess supply chain partners for their environmental sustainability and collaborate with them to enhance environmental practices (Foerstl et al. 2010; Vachon & Klassen 2008). One of the reasons to locate facilities closer to customer locations is to minimise the risk of

disruptions in supply or distribution (Chopra & Sodhi 2014). This strategy, in turn, reduces transportation costs and greenhouse gas emissions (Schaltegger & Burritt 2014). To mitigate disruptions arising from long-term changes, such as limiting the use of natural resources, firms upgrade technologies, facilities and logistics operations to become less dependent on natural resources (Fiksel, Goodman & Hecht 2014; Winston 2014). The capability of preparing for sudden and long-term changes, therefore, can enhance environmental sustainability.

The responses to disruptions can also lead to improvements in environmental practices. For example, Posco — a steel manufacturer — improved its environmental practices in response to the sudden price rise in iron ore and oil, which disrupted their operations. The firm introduced new technology which could utilise low-quality cheap iron. This technological change enabled working with geographically proximate suppliers. As a result, the firm was able to reduce energy consumption and environmental pollution (Lee 2010). Another example is the criticism faced by Nestlé in 2010 for the environmental damage caused by its suppliers of the Kit Kat chocolate product. This situation disrupted the firm's supplies. When recovering, the firm put in place supplier assessment and development programmes (Wolf 2014).

Firms in resilient supply chains work with other firms and share information and resources and collaborate in order to respond to and recover from disruptions (Brandon-Jones et al. 2014; Scholten & Schilder 2015; Scholten, Scott & Fynes 2014). These interactions create trust and commitment (Nyaga, Whipple & Lynch 2010; Zacharia, Nix & Lusch 2009), which allow common understandings to develop among the firms (Coleman 1988). A common understanding is important in implementing practices such as green purchasing, eco-design and reverse logistics (Green Jr et al. 2012a; Vachon & Klassen 2008). As a result, the following hypothesis is developed:

H5: Resilience has a positive association with environmental sustainability for firms operating in Australian manufacturing supply chains.

Supply chain disruptions affect resource availability and overall product demand (Sáenz & Revilla 2014). Firms in resilient supply chains address opportunities arising from these shortages by altering the control over the structures and functions of firms in the supply chain (Golgeci & Ponomarov 2013). A firm that responds and recovers quickly,

therefore, has the opportunity to increase sales and enjoy higher margins over competitors (Sáenz & Revilla 2014; Tukamuhabwa et al. 2015).

Recovery to a more favourable state than its competitors strengthens a firm's learning abilities (Fiksel et al. 2015). The knowledge accumulated through learning offers new capabilities for firms to respond more efficiently and effectively in future disruptions (Sáenz & Revilla 2014; Tukamuhabwa et al. 2015). As an example, after hurricane Katrina hit the United States in 2005, Cisco Systems — a firm that designs, manufactures and sells networking equipment — developed a resilient supply chain by integrating proactive mitigation capabilities and reactive capabilities. When the earthquake and tsunami struck Japan in 2011, Cisco was prepared and consequently, better able to react to the incident. While the tsunami reported the largest disruptions to the global supply chain ever recorded, Cisco did not incur revenue losses. Their learning from the previous incident helped Cisco to withstand the next disruption to their supply chain (Sáenz & Revilla 2014).

Firms build competencies by taking proactive actions to minimise disruptions or to mitigate their impacts (Blackhurst, Dunn & Craighead 2011; Scholten, Scott & Fynes 2014). These competencies reduce costs by minimising operational damages and enabling faster recovery. Additionally, firms gain reputational benefits by proactively engaging in activities that prevent disruptions, such as sustainability violations (Aragon-Correa & Sharma 2003). Furthermore, the learning accumulated through proactive engagement in sustainability initiatives provides an advantage over competitors when those sustainability activities are regulated by governments (Eriksson & Svensson 2015; Kleindorfer, Singhal & Wassenhove 2005). To prepare for slow and long-term changes, firms develop responsible business solutions, reduce resource consumption and improve supply chain operations (Fiksel, Goodman & Hecht 2014; Winston 2014). These activities improve productivity, reduce costs and minimise disruptions to operations when the changes occur (Chopra & Sodhi 2014).

Firms accumulate resilient capabilities from organisational and managerial processes and their interactions with supply chain partners. Consequently, these capabilities are path-dependent and unique for each firm. Recovery processes and the prevention of future potential disruptions help to develop trust among firms and supply chain partners through collaborative activities (Dyer & Singh 1998). As a result, firms need fewer

control mechanisms and assessment criteria in future transactions which in turn, reduce cost (Dyer & Singh 1998; Skjoett-Larsen 1999). Accordingly, resilience, as a dynamic capability coupled with social capital in firms, enables these firms to achieve more desirable financial and operational outcomes. Based on these points, the following hypothesis is proposed:

H6: Resilience has a positive association with economic sustainability for firms operating in Australian manufacturing supply chains.

3.6.3 Agility and resilience

Based on the literature, agility and resilience have been established as two distinct theoretical constructs. The main differences lie with the type of changes addressed by these capabilities and the response strategies. For example, agility considers anticipated or unexpected market changes that emanate from suppliers, customers or business environments (Sharifi & Zhang 2001). These changes are not disruptive, but affect a firm's demand or supply (Ismail & Sharifi 2006; Li et al. 2008) and expose a firm to a recurrent risk. However, resilience is developed in response to sudden unexpected or long-term market changes. Sudden changes can arise from incidents such as natural disasters, strikes or boycotts, terrorist attacks, political turmoil, technology failures and intellectual property invasion occurring upstream or downstream (Gunasekaran, Subramanian & Rahman 2015; Tukamuhabwa et al. 2015). Slow and long-term changes include climate change, innovations, changing global policies and a shift in cultural attitudes to name a few (Fiksel et al. 2015; Winston 2014). Another difference is that agility considers the adaptation to market changes (Braunscheidel & Suresh 2009; Gligor, Holcomb & Stank 2013). In contrast, resilience involves withstanding and recovering from disruptions (Pettit, Croxton & Fiksel 2013; Ponomarov & Holcomb 2009) or proactively minimising them (Chopra & Sodhi 2014; Fiksel et al. 2015; Winston 2014). Also, agility focuses on maximising opportunities raised by market uncertainties (Ismail & Sharifi 2006; Swafford, Ghosh & Murthy 2006b), and in contrast, resilience aims at minimising the negative consequences of market volatilities (Scholten, Scott & Fynes 2014; Wieland & Wallenburg 2013). Even though these concepts differ, both are concerned with mastering turbulence by responding to uncertainties in the business environment.

The literature has indicated the interconnections between these two concepts. For instance, Christopher and Peck (2004) argued that agility is an important characteristic of resilience. They suggested that developing agile capabilities is vital for firms to react and recover from disruptions quickly. Lee (2004) stated that firms in agile supply chains recover speedily from disruptions. Wieland and Wallenburg (2013) also assumed that agility is one of the two dimensions of resilience that enables reactions to change. Accordingly, agility enables resilience by improving response to disruptions.

The other studies have shown that agility is connected to resilience by providing access to and the timely sharing of information, and the speed of adapting resources (e.g., Jüttner & Maklan 2011; Pereira, Christopher & Da Silva 2014; Scholten, Scott & Fynes 2014). These studies demonstrate that agility supports resilience by providing information and reconfiguring resources.

The literature has established agility as an enabler of resilience. For example, Carvalho, Azevedo and Cruz-Machado (2012) identified agility as an essential capability for resilience. Two recent review studies on supply chain resilience (e.g., Nils-Ole et al. 2015; Tukamuhabwa et al. 2015) have shown that literature has assumed agility as an important enabler of resilience.

In line with the established literature, this study also proposes that agility enables resilience. However, none of the studies have empirically examined this relationship between agility and resilience, particularly in a quantitative setting. As a result, this study quantitatively examines the impact of agility on resilience, arguing that both are distinct capabilities that enable sustainability in supply chains. Based on the characteristics of agility and resilience, and using the dynamic capability view and social capital theory, the impact of agility on resilience in the context of supply chains is explained below.

Agility enables firms to stay abreast of market changes by networking with other firms (Blackhurst, Dunn & Craighead 2011; Sheffi & Rice 2005) and to acquire information during disruptions using various platforms and technology infrastructure (Chopra & Sodhi 2014). Speedy access to information about disruptive incidents helps firms to respond quickly (Golgeci & Ponomarov 2013) and reconfigure resources, both internally and in supply chains, to overcome threats and to exploit opportunities resulting from disruptions (Ambulkar, Blackhurst & Grawe 2015). For example, firms

redesign products and processes in supply chains during disruptions to restore production and material flows quickly (Blackhurst, Dunn & Craighead 2011; Bode et al. 2011; Scholten & Schilder 2015; Scholten, Scott & Fynes 2014).

Additionally, information sharing mechanisms of agility improve a firm's capacity to detect long-term market changes (Brandon-Jones et al. 2014). Responding to long-term changes is intertwined with product and process development, varying supply chain partners and modifying supply chain processes (such as warehousing and distribution) (Lee 2004). The ability to reconfigure supply chains for short-term changes facilitates firms to adjust supply chains for long-term market changes. Consequently, agility helps firms to detect slow and long-term changes and to prepare for them. Accordingly, agility, as the responsiveness to market changes, entails resources and competencies that are instrumental in being resilient.

The inter-firm relationships between firms in agile supply chains build trust that supports collaborations when overcoming disruptions or addressing long-term market changes. This induces joint efforts in their abatement strategies (Scholten & Schilder 2015). With the presence of trust-based relationships, supply chain members can receive information of strategic importance which provides the ability to detect disruptive changes in advance (Hung, Chen & Chung 2014). Trust among firms helps to prepare supply chains to meet long-term changes by adjusting activities of supply chain partner firms to minimise long-term disruptions (Tsai & Ghoshal 1998). Accordingly, agility impacts resilience and leads to the following hypothesis:

H7: Agility has an impact on the resilience of firms operating in Australian manufacturing supply chains.

3.6.4 Environmental sustainability and social sustainability

Based on the literature, it is inferred that social sustainability can be associated with environmental practices, as protecting the environment reflects firms' socially responsible actions. For example, activities that minimise global warming, ozone depletion and toxic releases benefit human health and reflect a broader commitment to the society (Clift 2003; Gopalakrishnan et al. 2012; Hutchins & Sutherland 2008). These activities preserve the environment for future generations, and hence, demonstrate social consideration of businesses (Clift 2003). For instance, the adoption

of renewable energy programmes preserves precious resources for future generations (Tate & Bals 2016). Furthermore, solutions to social issues, such as poverty and human health, are limited by the quality and the availability of resources in the natural environment (Fischer et al. 2007; Morelli 2013). For example, food production is constrained by soil health and availability of water. Human health is also directly affected by the quality of air and water. Therefore, practices that preserve the environment improve the wellbeing of society as a whole and link environmental and social sustainability.

Implementing activities such as eco-design, recycling, waste elimination and environmental management systems involve employee training (Sarkis, Gonzalez-Torre & Adenso-Diaz 2010). Production and distribution processes that reduce pollution improve employees' working conditions (Gimenez, Sierra & Rodon 2012; Govindan et al. 2014). Helping supply chain partners to reduce their environmental impact also demonstrates social sustainability (Ağan et al. 2016). Environmental practices can improve social sustainability across the supply chain. For example, environmentally friendly designs that use fewer hazardous materials and components improve the safety of production and material handling processes at both supplier and focal firms. Such products also alleviate safety issues associated with product handling in downstream operations, such as warehousing and transportation. In this way, environmentally friendly products improve workplace safety throughout the supply chain.

The engagement in environmental practices generates valuable assets for firms such as reputation and customer loyalty (De Giovanni 2012; Govindan et al. 2014), which in turn, can strengthen organisational commitment to act in a socially sustainable manner (Foerstl et al. 2010; Tate, Ellram & Kirchoff 2010). Firms that have realised the significance of stakeholder influence on environmental practices tend to engage in other voluntary actions that benefit society (Darnall, Seol & Sarkis 2009). This argument leads to the following hypothesis:

H8: Environmental sustainability has a positive association with social sustainability of firms operating in Australian manufacturing supply chains.

3.6.5 Social sustainability and economic sustainability

Social sustainability practices, such as ensuring human rights, safe working conditions, health and safety, and community development activities appear to improve economic performance (Yawar & Seuring 2015). Also, firms that offer a safe work environment for employees, in turn, have higher workplace productivity and employee retention rates (Carroll & Shabana 2011; Hoejmose, Roehrich & Grosvold 2014; Mani et al. 2016). Efforts to improve social sustainability, such as training and educating supply chain partner firms, strengthen inter-firm relationships which, in turn, provide economic benefits (Blonska et al. 2013).

Furthermore, social sustainability in supply chains provides economic benefits through improved stakeholder relationships. For example, improving community relationships and philanthropic engagements reflects the altruistic behaviour of firms, and hence creates a positive image among stakeholders (Foerstl et al. 2010). This positive image enables firms to retain the employees and supply chain partners (Hoejmose, Roehrich & Grosvold 2014). Additionally, such firms can attract investors as they have a lower risk of reputational damage (Carroll & Shabana 2011; Hoejmose, Roehrich & Grosvold 2014). Socially sustainable firms can distinguish their business offers from competitors (Lee & Jung 2016). As a result, both focal firms and downstream partners, such as retailers, benefit from the increased sales. Accordingly, social sustainability improves economic sustainability across the supply chain. This reasoning leads to the following hypothesis:

H9: Social sustainability has a positive association with economic sustainability for firms operating in Australian manufacturing supply chains.

3.6.6 Environmental sustainability and economic sustainability

Environmental sustainability practices enhance the economic performance of firms (De Giovanni 2012; Green Jr et al. 2012b; Shi et al. 2012). For example, waste reduction can lead to reduced resource consumption and improve profit margins (Rao & Holt 2005) and sales (Rusinko 2007). Recycling also reduces the cost of materials and provides income from the sale of recycled items (Erol et al. 2010). Certified environmental management systems reduce costs and enhance productivity and sales (Melnyk, Sroufe & Calantone 2003). Environmentally friendly solutions thus improve a

firm's reputation and customer satisfaction leading to economic benefits (González-Benito & González-Benito 2005; Lubin & Esty 2014).

In addition to improving economic performances in the short term, environmental practices have also demonstrated long-term economic benefits. For instance, environmentally friendly products and processes improve product quality and production efficiencies, which in turn, increase environmental and operational performance, leading to financial savings in the long run (Shi et al. 2012). The environmental practices also minimise the cost of future liabilities and thus offer financial savings (Green Jr et al. 2012a). The early engagement of firms with environmentally friendly technologies provides an advantage over competitors (Kleindorfer, Singhal & Wassenhove 2005). Green purchasing provides long-term financial savings by linking to environmentally sustainable suppliers (Shi et al. 2012). As illustrated in these examples, environmental sustainability improves economic sustainability in both the short term and the long term.

Additionally, implementation of these practices encourages close relationships and interactions with other firms (Green Jr et al. 2012a; Tate, Ellram & Gölgeci 2013; Vachon & Klassen 2008). The relationships develop trust and obligation among firms, which in turn, lead to improved economic performance along the supply chain (Dyer & Singh 1998; Simpson, Power & Samson 2007). This leads to the following hypothesis:

H10: Environmental sustainability has a positive association with economic sustainability for firms operating in Australian manufacturing supply chains.

3.7 Chapter summary

This chapter has presented a theoretical framework that explains how agility and resilience enable sustainability of firms in supply chains. Drawing on a dynamic capability perspective, it was established that supply chain agility and resilience are capabilities that enable sustainability. Furthermore, it was suggested that inter-firm relationships built through agility and resilience develop social capital among firms in supply chains to enhance sustainability.

This chapter has proposed ten hypotheses based on the theoretical framework. Each of these hypotheses is empirically tested and the results analysed and presented in Chapter 6. Table 3.1 presents a summary of the hypotheses and how they assist in accomplishing

the research objectives and answering the research questions. The next chapter will describe the research design, the instruments used and the data collection mechanisms supporting the empirical examination of the research questions.

Table 3.1 Summary of hypotheses and their relationships to the research questions

Overarching research question	How do agility and resilience affect sustainability of firms in the supply chain in the Australian manufacturing sector?
Research sub-questions	**Research hypotheses**
1. What are the attributes of supply chain agility and resilience in firms in the Australian manufacturing sector?	Will be answered in the qualitative phase of the study (details are in Chapter 4)
2. What sustainability practices are present in firms in the Australian manufacturing sector?	Will be answered in the qualitative phase of the study (details are in Chapter 4)
3. What are the impacts of agility and resilience on the three dimensions of sustainability (social, environmental and economic) in firms in the supply chain in the Australian manufacturing sector?	Will be answered in the quantitative phase of the study (details are in Chapter 4) H1: Agility has a positive association with social sustainability for firms operating in Australian manufacturing supply chains. H2: Agility has a positive association with environmental sustainability for firms operating in Australian manufacturing supply chains. H3: Agility has a positive association with economic sustainability for firms operating in Australian manufacturing supply chains. H4: Resilience has a positive association with social sustainability for firms operating in Australian manufacturing supply chains. H5: Resilience has a positive association with environmental sustainability for firms operating in Australian manufacturing supply chains. H6: Resilience has a positive association with economic sustainability for firms operating in Australian manufacturing supply chains. H7: Agility has an impact on the resilience of firms operating in Australian manufacturing supply chains. H8: Environmental sustainability has a positive association with social sustainability of firms operating in Australian manufacturing supply chains. H9: Social sustainability has a positive association with economic sustainability for firms operating in Australian manufacturing supply chains. H10: Environmental sustainability has a positive association with economic sustainability for firms operating in Australian manufacturing supply chains.

4 Methodology

4.1 Introduction

Chapter 3 explained the theoretical framework and hypotheses for this study. Based on the dynamic capability view and social capital theory, it established an argument for the impact of supply chain agility and resilience on sustainability.

This chapter details the methodology used to examine the hypotheses and the research questions set in order to investigate the characteristics and practices of agility, resilience and sustainability of firms in Australian manufacturing supply chains. A mixed methods approach involving qualitative and quantitative phases was used. Phase 1 used semi-structured interviews, to establish the attributes and practices of agility, resilience and sustainability from the perspective of Australian manufacturers. Phase 2 empirically tested the hypotheses based on a survey questionnaire using a larger dataset, which conveyed the perspectives of supply chain partners. The data collected using the two methods provide an understanding about the presence of the agile, resilient and sustainable characteristics and the impacts of agility and resilience on the sustainability of firms in Australian manufacturing supply chains.

This chapter details the research design approaches, instrument development procedures and measurement validation mechanisms. It also presents the sampling procedures for both Phase 1 and Phase 2. The chapter concludes by illustrating the data analysis techniques for the study.

4.2 Research design

The mixed methods approach allows researchers to choose a combination of methods and procedures to best answer research questions (Johnson & Onwuegbuzie 2004). Several different typologies are available for mixed methods designs depending on the way of combining methods (Johnson & Onwuegbuzie 2004). The mix can happen

within or across the stages of objective setting, data collection, research methods, data analysis or data interpretation (Johnson & Onwuegbuzie 2004; Johnson, Onwuegbuzie & Turner 2007). The mix can also appear as different levels of qualitative and quantitative phases (Johnson & Onwuegbuzie 2004; Johnson, Onwuegbuzie & Turner 2007). Another form of combining methods is by ordering through time, and whether the qualitative and quantitative phases are conducted concurrently or sequentially (Creswell 2009; Johnson & Onwuegbuzie 2004).

Of the various approaches that can be used to conduct mixed methods research, this study used the sequential exploratory method (Creswell 2014; Hanson et al. 2005) where the qualitative study precedes the quantitative phase. This approach was adopted since the research questions of this study are best answerable using qualitative and quantitative studies and the qualitative results can inform the quantitative study (Bergman 2010; Richards & Morse 2007).

Phase 1, a qualitative inquiry, was used to explore insights from the people who had actually experienced the phenomena of the study (Bluhm et al. 2011). The findings of the qualitative phase clarified the attributes of supply chain agility and resilience, as well as the sustainability practices, and provided a better understanding of the phenomena. These results helped to confirm the validity of constructs and the variables in the proposed model. The qualitative results were additionally used to refine the scale items of the quantitative study and to validate the research instrument (Bergman 2010; Richards & Morse 2007). The qualitative results, therefore, provided input for the quantitative phase.

Phase 2 was a confirmatory quantitative study. Quantitative methods are appropriate to determine the relationships between constructs and to test hypotheses (Bryman 2008). It is assumed that cross-sectional survey data explain the relationships between predictors and outcomes as they exist at a particular point in time (Saunders, Lewis & Thornhill 2003). Considering these facts, a quantitative study was employed to answer the research question set out in Chapter 1 about the impacts of agility and resilience on the sustainability of firms in Australian manufacturing supply chains.

4.3 Qualitative phase

The qualitative phase aimed to address the first and second research questions. This phase was designed to identify the attributes of supply chain agility, resilience and sustainable practices among Australian manufacturers. These questions were exploratory in nature and supported the application of a qualitative inquiry.

Of the various methods used to collect qualitative information, the interview technique was adopted in this study. Interviewing is the most common data collection method in qualitative research (Bluhm et al. 2011). For this study, the interviews provided an ability to focus on participants' views on supply chain practices.

Since this study examined the supply chain practices of firms, one-on-one interviews with a firm representative were appropriate for data collection. These one-on-one interviews were conducted either in person, online via Skype software or through a telephone conversation. One-on-one interviews provide rich data as they allow the researcher to capture all the background information and informal communication in addition to the interview content (Richards 2009). Nevertheless, a telephone interview is an alternative that preserves depth, quantity and the nature of responses (Bryman 2008; Cachia & Millward 2011) and at the same time reduces the associated cost and time. Both telephone and Skype interviews were deemed to be suitable for this study (Creswell 2013).

4.3.1 Population and sampling

The firms were selected using a purposive sampling technique. Since the objective of the qualitative phase was to identify agile, resilient and sustainable practices of the manufacturing firms in Australia, the researcher aimed to include participants from firms that are from the various industries within the manufacturing sector in Australia. This approach enhanced the researcher's understanding of the overall manufacturing sector perspective. Furthermore, the respondents were drawn from small, medium and large firms. Target respondents were senior managers of firms who were knowledgeable about their supply chains' operations and issues.

According to the Australia and New Zealand Standard Industrial Classification (ANZSIC), the manufacturing sector includes 15 industries (Australian Bureau of Statistics (ABS) 2016a). 31 interviews were conducted with the managers of

manufacturing firms within these industries. The types of manufacturing industries and the distribution of the firms interviewed within each industry are shown in Table 4.1. Despite the attempt to draw samples to represent all the industries across the manufacturing sector, access to organisations in primary metal and metal product (C21) and the furniture and other manufacturing industries (C25) was unsuccessful. The interviews were conducted to gather data until theoretical saturation or no new findings (relating to managers' perceptions of the agile, resilient and sustainable practices in their supply chains) were evident.

Table 4.1 Manufacturing industries and sample distribution of the interviewed firms

ANZSIC Code	Manufacturing industry	Number of firms participating
C11	Food product manufacturing	5
C12	Beverage and tobacco manufacturing	2
C13	Textile, leather, clothing and footwear manufacturing	1
C14	Wood product manufacturing	1
C15	Pulp paper and converted paper product manufacturing	1
C16	Printing	1
C17	Petroleum and coal product manufacturing	1
C18	Basic chemical products manufacturing	5
C19	Polymer and rubber product manufacturing	2
C20	Non-metallic mineral product manufacturing	2
C21	Primary metal and metal product manufacturing	0
C22	Fabricated metal product manufacturing	2
C23	Transport equipment manufacturing	3
C24	Machinery and equipment manufacturing	5
C25	Furniture and other manufacturing	0
	Total	**31**

Source: ABS (2016a)

4.3.2 Interview protocol and pilot testing

Semi-structured interviews were used as they deliver rich insights into the issues being investigated while offering a specific purpose and guidelines to direct the interviews (Barriball & While 1994). In semi-structured interviews, a list of questions (interview protocol) is used to guide the interview process (Doody & Noonan 2013; Gillham 2005)

Another feature of semi-structured interviews is the flexibility for the interviewer to adjust questions according to the interview context (Saunders, Lewis & Thornhill 2003). Semi-structured interviews enabled flexibility, while also providing guidance to capture interviewees' perceptions in a systematic manner. In this study, the semi-structured questions were prepared in advance with relevant probes (Barriball & While 1994; Gillham 2005). The questions were open-ended, general and focused on identifying

agile, resilient and sustainable practices and the relationships among sustainability dimensions. The wording of the questions was carefully scrutinised to minimise any social desirability bias that may lead respondents to answer projecting a favourable image (Nederhof 1985).

The interview protocol had three sections relating to agile, resilient and sustainability practices respectively. Agility-related questions gathered information about the types of market changes encountered by the firms, response strategies and the benefits derived from their responses. Resilience-related questions focused on the sudden or unexpected changes, including the long-term changes faced by the firm and the strategies they employed to overcome them. Sustainability-related questions inquired about the social and environmental practices in place, the implementation procedures, factors impacting the implementation of sustainability practices, economic sustainability, sustainability measures and the relationships among the various dimensions of sustainability.

After the initial interview questions had been developed, discussions were held with the researcher's supervisors to assess the appropriateness of the questions. The length of the interview protocol, the breadth of the questions and the word expressions were carefully scrutinised at this stage. The appropriateness of the revised interview protocol was further verified through pilot interviews before interviewing the target respondents.

Three pilot interviews were conducted. Gillham (2005) has recommended conducting two to three pilot interviews to observe how the interviews run and to identify the relevant prompts and the changes required. The pilot interviews aimed at verifying the relevance of the questions, the sequence of questions and the style of interviewing. The participants in the pilot interviews were experienced managers in the manufacturing sector in Australia. All three pilot interviews were conducted face-to-face. The participants agreed to have their interviews audio-recorded. At the end of the interviews, each participant was asked to provide feedback on the clarity of the questions and to make suggestions for improvements.

The first pilot interviewee supported the estimated timing of the interview and the order of the questions. The second pilot interviewee recommended that some of the questions be changed to improve the flow. These comments were taken into account for the third interview. The third interviewee suggested starting the discussion by reminding the interviewee about the purpose of the interview, ethics clearance procedures and the

confidentiality and anonymity of the information. This interviewee also suggested asking for background information on the role of the person in the organisation.

During the pilot interviews, the researcher avoided making any comments on responses. The researcher provided clarification for some of the terms only when asked. By responding in that manner, the researcher tried to minimise bias. The researcher also avoided interrupting respondents, even if the answers were lengthy or deviated from the focus. The same approaches were adopted in the final interviews. Each pilot interview lasted between 40–50 minutes. The final interview protocol used to conduct the interviews is attached as Appendix F.

4.3.3 Arranging and conducting interviews

The potential organisations were initially contacted by telephone or via e-mail to check their availability for an interview. Making these arrangements required several rounds of communication between the firm and the researcher. Once agreement was reached, an invitation letter was sent, seeking permission to conduct the interview. The letter indicated the research purpose and the aims of the interview. It also stated the approximate time that would be taken for the interview and the characteristics of the potential interviewees. Easterby-Smith, Thorpe and Lowe (2002) argue that requests that indicate a minimum amount of time, as well as resource requirements, have a higher chance of acceptance. Following this recommendation, the interviews were limited to a maximum of an hour and a single participant was requested from each organisation. The invitation letter (see Appendix B) was drafted in a manner to increase the possibility of gaining access to the organisation.

In some instances, the person initially contacted recommended or directed the researcher to another person in the organisation for the discussion. The time and the mode of the interview were negotiated with the participants according to their convenience (Doody & Noonan 2013; Gillham 2005). All participants who agreed to be interviewed were provided with the information sheet (see Appendix D), which describes the nature of the study and the procedures that would be adopted for participation and information handling.

All participants were asked to sign the consent form (see Appendix G) prior to the interviews. The ethical principles of informed consent and the privacy of respondents

were assured before all interviews (Doody & Noonan 2013). The interviews were audio-recorded with a digital audio recorder after receiving permission from the interviewees (Doody & Noonan 2013; Gillham 2005). The audio recordings guarantee an accurate record of the interview and enhance the reliability of the data (Barriball & While 1994; Gillham 2005). However, two participants were reluctant to be recorded; extensive notes were taken from those two interviews.

Before starting each interview, the interviewees were reminded about the purpose of the interview and assured of the confidentiality of the information. They were again reminded about the audio-recording and their verbal consent was obtained. After that, the interviewees were asked about their role in the organisation as an opening to the discussion. This question increased the comfort level for the interviewees, and helped serve as an icebreaker. During the interviews, leading questions were avoided so as to minimise bias in the study and also to allow participants to talk freely (Richards & Morse 2007). The researcher was also non-judgemental of the interviewees' responses (Gillham 2005). Additionally, field notes were taken during the interviews about the important points emerging from the interviews.

4.3.4 Analysing qualitative data

All the transcribed interviews were imported into NVivo10 software for analysis. On one occasion, two representatives from the same firm were interviewed. However, the intention of one of the participants was to only provide information about the firm. That interview was excluded from the analysis. Finally, 31 interviews were analysed representing 31 manufacturing firms in Australia.

A thematic analysis was conducted on the interview data to identify the key ideas of agility and resilience, and the actions and strategies supporting sustainability. Data were analysed through developing codes and identifying themes (Bryman 2008; Creswell 2013). Coding is the reduction of statements to meaningful segments and labelling with an appropriate name that best describes the information (Creswell 2013). The creation of codes depends on the researcher's understanding and interpretation of the data (Richards 2009). The identification of themes involves condensing similar or related codes together. Comparison of data is the final stage which helps identify the relationships among the constructs (Richards 2009).

Coding helps to understand the trends in data through data abstraction. Three types of coding were used in the qualitative analysis: descriptive coding, topic coding and analytic coding (Richards 2009). The descriptive codes represent information about the characteristics or attributes. These nodes store demographic information, such as industry, firm size and ownership. These demographic codes are important for the detailed analysis of the study to investigate patterns. Topic coding is labelling according to the subject. Analytic coding is labelling to support an emerging theory or theory affirmation. Analytic codes represent the meaning or reflections on the subject content in the code (Richards 2009).

All the interview transcripts were analysed for the three possible coding. Whenever the data deviated from existing codes, a new code was created (Richards & Morse 2007). Actions were taken to ensure a purpose for all the codes to avoid falling into the trap of creating unnecessary codes. Some codes were labelled as in vivo codes which drew exact words of the respondents. When coding, the interview data were coupled with the field notes. Wherever possible, the data coded were further verified using information available from organisational websites.

After the initial coding, the text in each category was carefully examined to identify new meanings. This process introduces a revision of existing codes and coding on to introduce new sub-categories that evolve from the data in the original codes (Richards 2009). For example, the code information received was grouped into two sub-categories to represent the types of information and the information channels. A sample of codes is attached in Appendix I.

4.3.5 Trustworthiness

Trustworthiness is crucial to ensure the rigour of the methods and the results, and comprises the characteristics of transferability, dependability and conformability (Bryman 2008). Transferability was established by providing a description of the sample studied. To increase dependability, complete records of the data collection and analysis were kept. To assure conformability, the researcher acted in good faith by excluding personal values and theories (Thomas & Magilvy 2011).

Semi-structured interviews may be subject to data quality issues in relation to bias (Saunders, Lewis & Thornhill 2003). Consequently, the researcher took every possible

care to avoid any bias (Richards 2009). At the planning stage, the interview protocol was carefully designed to minimise bias and to improve the trustworthiness of the data. While conducting interviews, the interviewer avoided posing leading questions (Gillham 2005).

The sustainability-related questions were likely to lead to social desirability bias in the interview responses. To avoid this bias and to improve the accuracy of the data, data triangulation was applied (Denzin & Lincoln 2008). Triangulation is the use of multiple information sources to understand a phenomenon (Creswell 2013). The evidence of different data sources provides either synergies or conflicts to reconcile the deeper meanings of the differences (Eisenhardt 1989). The publicly available documents, sustainability reports and information available on websites were analysed to gain further insights and verify the accuracy of the interview data (Richards 2009).

To enhance the trustworthiness of data, a high-quality digital recorder was used for audio-recording and transcribing the interviews (Saunders, Lewis & Thornhill 2003). During the analysis stage, the coding was assured through inter-rater reliability (Richards 2009). Ensuring the reliability of coding is important as it is a highly subjective process that depends on the researcher’s understanding and interpretation of the data (Richards 2009). Inter-rater reliability approach evaluates the consistency or uniformity of the codes created by two persons analysing the same piece of text (Richards 2009).

To ensure trustworthiness of the analysis, an independent coder was given 10 interview samples and was asked to independently assign passages from the interview transcript to the codes. The independent coder's categorisation was then compared to the original coding. The percentage of agreement between the independent coder and the original coding was 0.89, which is substantially higher than the 0.70 minimum suggested by Cohen (1960). A sample result sheet is attached in Appendix J.

4.4 Quantitative phase

The aim of the quantitative phase was to address research question 3, which examines the impacts of agility and resilience on sustainability dimensions in supply chains. In this phase, a questionnaire was prepared and distributed to firms representing the various stages of the manufacturing supply chains in Australia. This section details the

procedures followed and the statistical analysis techniques employed in this phase of the study.

4.4.1 Data collection

Surveys have been identified as the most popular data collection method for studies that employ statistical analysis (Dillman 2007; Saunders, Lewis & Thornhill 2003). This was also the case in the supply chain literature, where surveys are also cited as the most frequently used data collection method (Seuring 2008).

The most commonly used survey instrument is the questionnaire (Forza 2002). A questionnaire contains a set of questions (Sekaran 2006) that can be filled either by participants, the researcher or an assistant to the survey (Bryman 2008). Among these methods, a self-administered questionnaire was chosen for this study since this method is widely accepted when the survey requires a larger sample (Dillman 2007). An online questionnaire was used to reduce the cost involved in employing hardcopy postal surveys. Previous researchers have confirmed that a properly administered online questionnaire with adequate reminders yields a similar response rate to that of postal surveys (Dillman 2007).

4.4.2 Scale development

The measurement scales were developed using the processes proposed by Churchill (1979) and DeVellis (2012). According to Churchill (1979), scale development is an eight-step process of identifying the domain of interest, developing a sample of items, collecting the first round of data, cleaning the measures, assessing the reliability of the items with new data, measuring the validity of the construct and developing norms. The steps of DeVellis (2012) resemble those provided by Churchill (1979), despite the use of different terminologies. These steps are: determining the clarity of things to be measured, generating a pool of items, determining the format for measurement, having experts review the initial items, forming the validated items, using the items to develop a sample, evaluating items and optimising the scale length (DeVellis 2012). Drawing on these two approaches, the steps shown in Table 4.2 were adopted in this study.

Table 4.2 Scale development process

Stage	Scale development component
1	Specify the domain of constructs to be measured
2	Item generation
3	Determining the format for measurement
4	Expert review of items
5	Pilot study
6	Clean the measures
7	Data collection
8	Reliability and validity assessment

4.4.2.1 Specifying the domain of constructs to be measured

The purpose of this step was to specify the scope and enhance the clarity of the constructs. The clarity of the domain can be achieved by defining the theories that govern the constructs and the level of specificity at which the construct is applied (DeVellis 2012). In this study, the constructs were defined from the literature review and were supported by theories described in Chapter 2. The specific dimensions of each construct were also drawn from the literature. These dimensions were carefully derived to ensure that each construct is distinct from the other constructs (DeVellis 2012). Defining a specific domain clearly is vital in identifying accurate measurement items to represent constructs (Churchill 1979; DeVellis 2012).

4.4.2.2 Item generation

The constructs are abstract concepts which are also known as directly unobservable latent variables (Byrne 2010). They should be manifested through directly observable and measurable indicators. These indicators reflect the unobservable latent variables and provide an indirect measurement of the latent variables (Byrne 2010). Defining latent variables into measurable factors is called as operationalisation (Forza 2002; Neuman 2006; Sekaran 2006).

The operationalisation process develops variables that link the conceptual level with the measurement level (Bergman 2010; Neuman 2006). The framework developed in this study comprised five theoretical constructs: agility, resilience, social sustainability, environmental sustainability and economic sustainability. The measurement items for these constructs should reflect the dimensions of the constructs within the specified domain (Churchill 1979; DeVellis 2012; Malhotra et al. 2012).

The measurement items for the constructs agility, resilience, social sustainability, environmental sustainability and economic sustainability, were identified from the

literature, as shown in Table 4.3, and the rationale is explained below. The literature provides a reliable source for the established measurement items (Churchill 1979; DeVellis 2012). The use of already established scales strengthens the validity and reliability of the measurements. The contextual suitability of the items was ensured to obtain the required level of stability of the measures (Kalafatis, Sarpong & Sharif 2005).

The measurement items were selected with the goal of specific measurement in mind (DeVellis 2012). Item redundancy is recommended at the initial stage as the number of items affects the internal consistency of the scale items (DeVellis 2012). The items were precisely worded to ensure clarity of expression and to capture the central idea of the constructs. Ambiguous, lengthy, multiple negative, double-barrelled, leading and loaded items were avoided (Churchill 1979; DeVellis 2012). Negatively-worded items were sparingly introduced to reduce the tendency for spontaneously selecting the same response choice (Sekaran 2006) and to prevent agreement bias (DeVellis 2012). In addition, the items were refined to avoid social desirability bias (Churchill 1979). The original items were reworded while the initial meanings of the items prevailed. Furthermore, new items were introduced appropriately to adjust to the present research context of manufacturing supply chains. Following the above steps, a set of items was developed for agility, resilience and for the three sustainability dimensions, as explained below.

To measure agility, the measurements used by Gligor and Holcomb (2012b) were selected. This study has adopted the dynamic capability view to represent supply chain agility. In addition, one new item was introduced to capture the ability of the firms to respond quickly to changes in demand. This aspect is absent from the current scale.

The measurement items for supply chain resilience are new to the field and only a few scales are available to date. The items designed by Ambulkar, Blackhurst and Grawe (2015) and Golgeci and Ponomarov (2013) were selected due to their theoretical appropriateness. These studies have used the dynamic capability view of resilience. The item *Our firm is able to respond to unexpected changes in the business environment (e.g., demand, supply, environmental changes such as natural disasters, economic crisis etc.)* was adapted from Golgeci and Ponomarov (2013). The examples were provided to increase the accuracy of responses as they illustrate the types of similar events respondents can think of when answering the questions (Tourangeau et al. 2014).

Furthermore, the item *Our firm can maintain high situational awareness at all times of current and long-term changes in markets* was worded to indicate only current and long-term changes since the literature supports having information about current changes and/or long-term changes (e.g., Chopra & Sodhi 2014; Fiksel et al. 2015; Johnson, Elliott & Drake 2013; Jüttner & Maklan 2011; Sáenz & Revilla 2014; Winston 2014).

The measurement items for social sustainability were derived from the studies of Awaysheh and Klassen (2010), Maloni and Brown (2006), Paulraj (2011) and Pullman, Maloni and Carter (2009). Two additional items were introduced to capture social sustainability in business transactions based on Awaysheh and Klassen (2010). The perspective of ethical business conduct was derived from Maloni and Brown (2006).

For environmental sustainability, items from a variety of measurement scales were combined to develop a suitable scale that represents the context of environmental sustainability for the present study. The items were mainly adapted from Gimenez and Sierra (2013), Hsu et al. (2013) and Zhu, Sarkis and Lai (2013). The item *Our firm makes efforts in reducing pollution, waste and hazardous materials* was modified to add the phrase hazardous materials. The purpose of this item is to capture activities that minimise any environmental damage caused by the firm's operations. The responses refer to any of the pollutants, waste or hazardous materials.

The measures of economic sustainability were drawn from Rao and Holt (2005), Paulraj (2011) and Zailani et al. (2012). Rao and Holt (2005) designed items to measure the economic performance of green supply chains. The items derived from Paulraj (2011) represent economic performance in sustainability, while items supplied by Zailani et al. (2012) demonstrate the economic performance of sustainable supply chains.

4.4.2.3 Determining the format for measurement

Likert scales were selected for measurement as they are appropriate for measuring beliefs, opinions and attitudes (DeVellis 2012). A seven-point scale ranging from strongly agree to strongly disagree was adopted for capturing a wide range of perceptions of the measurement items. Sophisticated statistical analysis methods can be applied to this wide breadth of scales (Sekaran 2006). A rationale for use of a seven-point Likert scale is given below:

1. Likert scales with fewer intervals do not meet the maximum likelihood assumption in confirmatory factor analysis (Bovaird & Koziol 2012). This is because items behave as categorical when there are fewer options (Bovaird & Koziol 2012). The higher intervals reduce the categorical nature and as a result, the items tend to behave as continuous (Bovaird & Koziol 2012).

2. Higher intervals in scale reduce the skewness and increase the sensitivity and normality of data (Leung 2011). Scales above six intervals tend to display normal distributions (Leung 2011).

3. Seven-point scales are considered to be more reliable, provide the ability to the respondents to discriminate between the scale values and reduce the number of undecided answers (Cohen, Manion & Morrison 2011).

4. Scales with seven-point intervals have been identified as the optimal level of intervals for scales (Cohen, Manion & Morrison 2011; Finstad 2010; Noar 2003).

5. Some of the scale items used in this study have been previously used on seven-point scales (e.g., Ambulkar, Blackhurst & Grawe 2015; Gligor & Holcomb 2012b; Golgeci & Ponomarov 2013; Paulraj 2011).

Respondents can select somewhat agree when the item is slightly present in their firms. If it is clearly visible, the response will be agree. A respondent selects somewhat disagree if the item is slightly absent. The response for an absent item is disagree.

A scale with an odd number of options can represent a central neutral point where the observed characteristic falls somewhere between the extremes of a continuum (DeVellis 2012). One drawback of Likert scales with an odd number of options is that the respondents may tend to select the neutral point in order to avoid a choice (DeVellis 2012). To prevent this, an eighth option was introduced as not applicable or do not know.

4.4.2.4 Expert review of items

The objective of this step is to assess the quality and clarity of the measurement items in the initial pool (DeVellis 2012; Malhotra et al. 2012). The quality of the item depends on the comprehensiveness and the relevance of the items for the construct (DeVellis

2012; Malhotra et al. 2012). This step also maximises the content validity (DeVellis 2012) by confirming the face validity of the items. Their clarity assures the extent to which the items convey the intended meaning to the respondent.

The items were reviewed by two knowledge experts in the field. Each item was evaluated against the definition of the construct. In addition, the experts identified some missing dimensions (DeVellis 2012). New items were introduced at this stage in order to ensure the proper representation of the constructs of resilience and environmental sustainability. For the resilience construct, two items were introduced to capture first, the ability to minimise causes of disruptions; second, the ability to collaborate with supply chain partner firms in responding to changes. An item was introduced into the environmental sustainability scale to capture selecting customers based on environmental criteria. The adapted and modified measurement scale items resulting from the expert review process are shown in Table 4.3. These scale items were used in designing the questionnaire prior to the pilot study.

Table 4.3 Measurement scale items

Measure	Source
Agility	
Our firm can detect strategic opportunities/challenges in a timely manner (e.g., new competitor movement, new economic tendency, new technology and new market)	Gligor and Holcomb (2012b)
Our firm can reconfigure supply chain resources in a flexible manner to respond to strategic opportunities/challenges	
Our firm can detect changes in demand in a timely manner	
Our firm can detect changes in supply in a timely manner	
Our firm can reconfigure supply chain resources in a flexible manner to respond to changes in demand	
Our firm can reconfigure supply chain resources in a flexible manner to respond to changes in supply	
Our firm can reconfigure supply chain resources quickly to respond to changes in supply	
Our firm uses various sources of information to keep abreast with operational changes (e.g., changes in demand, supply, production etc.)	
Our firm can reconfigure supply chain resources quickly to respond to changes in demand	Newly developed
Resilience	
Our firm is able to respond to unexpected changes in the business environment (e.g., demand, supply, environmental changes such as natural disasters, economic crisis etc.)	Golgeci and Ponomarov (2013)
Our firm can return to its original or better state after being disturbed by sudden changes	
Our firm can maintain a desired level of control over structure and functions of the organisation during sudden changes in the supply chain	
Our firm has the ability to learn from unexpected events in the supply chain	
Our firm can adapt to sudden changes in the supply chain easily	Ambulkar, Blackhurst and Grawe (2015)
Our firm can maintain high situational awareness at all times of current and long-term changes in markets	
Our firm collaborates with supply chain partner firms in responding to changes in markets	Newly developed
Our firm takes actions to minimise the causes leading to unexpected changes in markets	

Continued on next page

Table 4.3 Continued

Measure	Source
Social sustainability	
Our firm takes actions to improve the occupational health and safety of our employees	Paulraj (2011)
Our firm ensures the rights of the employees	
Our firm supports the welfare and betterment of suppliers	
Our firm supports the welfare and betterment of the wider community	
Our firm takes actions to develop employee skills	Pullman, Maloni and Carter (2009)
Our firm considers the social sustainability of suppliers in business	Awaysheh and Klassen (2010)
Our firm considers the social sustainability of customers in business	
Our firm practices ethical business conduct in our business transactions	Maloni and Brown (2006)
Environmental sustainability	
Our firm makes efforts in reducing pollution, waste and hazardous materials	Gimenez and Sierra (2013)
Our firm engages in recycling activities	
Our firm designs environmental friendly business solutions	Hsu et al. (2013)
Our firm selects suppliers based on environmental criteria	Hsu et al. (2013); Zhu, Sarkis and Lai (2013)
Our firm implements environmental management systems	Zhu, Sarkis and Lai (2013)
Our firm cooperates with suppliers in environmental activities	
Our firm cooperates with customers in environmental activities	
Our firm selects customers based on environmental criteria	Newly developed
Economic sustainability	
Our firm has entered new markets over the past three years	Rao and Holt (2005)
Our firm is able to charge premium prices on products/services	
Our firm has achieved higher profit margins compared to competitors	
Our firm has improved return on investment over the past three years	Zailani et al. (2012)
Our firm has increased sales over the past three years	Rao and Holt (2005);
Our firm has increased market share over the past three years	Zailani et al. (2012)

4.4.3 Questionnaire design

A questionnaire was designed to capture the managers' perceptions of agility, resilience and sustainability in their organisations. The questionnaire consisted of six main sections. Section A captures the demographic information related to the respondent's firm, the stage of the manufacturing supply chain represented by the firm, firm's activities and the respondent's demographic information relating to their employment. Sections B, C, D, E, and F capture the extent of agility, resilience and, social, environmental and economic sustainability within the respondent's firm, respectively.

The questionnaire development process adhered to the guidelines for designing an effective questionnaire, which minimise respondent biases and measurement errors (DeVellis 2012; Sekaran 2006). The questions were sequenced such that respondents

would progressively navigate from general to specific questions and from easy-to-answer to difficult questions. The questions were mostly closed-ended, while open-ended questions were incorporated solely to capture the demographic details of the respondent.

An online questionnaire was designed using Qualtrics Software. The options of the Likert scale were explained in specific words as well as presented in a continuum for all the statements in Sections B–F. Such forms of clarity increase respondents' ability to discriminate between the scale values (DeVellis 2012). The online survey was pretested following the procedures proposed by Dillman (2007). As a first step, the questionnaire was reviewed by the supervisors. Feedback was obtained relating to comprehension of the questions, their logical structure, the appropriateness of the answers provided for respondents to select from and the relevance of the questions. Then, the revised questionnaire was tested with cognitive interviews (Dillman 2007). The purpose of cognitive interviews is to evaluate whether the questions can be comprehended in the manner the researcher intends and whether the questions can be accurately answered. Three cognitive interviews were conducted with people who are experienced in both industry and academia. Their suggestions were incorporated into the questionnaire before the pilot study was conducted.

4.4.3.1 Pilot study

The pilot study was conducted with 50 firms in the manufacturing sector. This sample size was deemed adequate and in line with previous studies in the supply chain area (e.g., Gligor & Holcomb 2014; Liu, Srai & Evans 2016; Marshall et al. 2015a). A pilot study tests the questionnaire to identify potential areas for improvement before the main survey (Saunders, Lewis & Thornhill 2003). The participant firms represented all the stages of the manufacturing supply chain in Australia comprising suppliers, manufacturers, distributors, wholesalers, retailers and customers. The respondents were sent a link to the online questionnaire. They were also requested to comment about the clarity of the statements. During the first week, eight completed questionnaires were received. Another five responses were obtained after sending reminders. Finally, 13 responses were received in total for the pilot study.

4.4.3.2 Cleaning the measures

The purpose of this stage is to identify poorly performing measurement items from the results of the pilot study (Churchill 1979; Malhotra & Grover 1998). The data collected in the pilot study were examined to check for inconsistencies and errors. Reliability is one of the indicators that reflects the quality of a scale (Churchill 1979; DeVellis 2012). A reliability test was performed by calculating Cronbach's alpha values to verify the internal consistency of the scale items (Churchill 1979; Malhotra & Grover 1998). The reliability values derived from the scales of each construct are shown in Table 4.4.

Table 4.4 Reliability coefficients for measurement scales

Scale	Cronbach's alpha
Agility	0.63
Resilience	0.75
Social sustainability	0.64
Environmental sustainability	0.66
Economic sustainability	0.61

Cronbach's alpha values of less than 0.6 are unacceptable (DeVellis 2012). Lower alpha values are acceptable at the early stage of the research (Nunnally & Bernstein 1994). No further modifications were performed at this stage since the sample size of 13 firms for the pilot study was considered too small to represent the true population (DeVellis 2012).

4.4.4 Survey

Once the questionnaire was finalised, the next step was to conduct the survey. Conducting the survey included the following steps: sample selection, deciding on key informants and questionnaire distribution.

4.4.4.1 Sample design

This study excluded offshore suppliers and customers and only considered firms operating in Australia in manufacturing supply chains. The sampling frame is the list of representative elements of the population (Neuman 2006), which was obtained from various databases and through industry associations. First, the categories that best represent the stages in the Australian manufacturing supply chain were identified. The main categories of firms according to the ANZSIC classification are shown in Table 4.5 (ABS 2016d). The categories A, B, C, D, E, F, G, H, I, J, L, M, Q and R were identified

as the best representations of the manufacturing supply chain. The firms belonging to these categories were selected for the survey.

Table 4.5 Codes and titles of divisions in the ANZSIC 2006 classification

Code	Title
A	***Agriculture, forestry and fishing***
B	***Mining***
C	***Manufacturing***
D	***Electricity, gas, water and waste services***
E	***Construction***
F	***Wholesale trade***
G	***Retail trade***
H	***Accommodation and food services***
I	***Transport, postal and warehousing***
J	***Information media and telecommunications***
K	Financial and insurance services
L	***Rental, hiring and real estate services***
M	***Professional, scientific and technical services***
N	Administrative and support services
O	Public administration and safety
P	Education and training
Q	***Health care and social assistance***
R	***Arts and recreation services***
S	Other services

Note: The bold text represents various stages in manufacturing supply chains.

Source: ABS (2016d)

A stratified random sampling technique was employed to draw up a sample of respondents. The appropriate sample size is determined by factors such as the type of data analysis, required level of accuracy to reach the study objective and the characteristics of the population (Neuman 2006). As structural equation modelling (SEM) was applied for analysis, the sample size was determined by the SEM requirements. The recommendation is for 200 or more units of analysis, as a sample size with less than 200 will result in non-convergence and improper solutions (Bagozzi & Yi 1988; Boomsma & Hoogland 2001; Hair et al. 2010; Kline 2010). To reach the minimum level of 200, a sample of 1000 firms was identified for the survey.

In order to yield a greater sample size, arrangements were made with a few industry associations subsequently to distribute the questionnaire to their members. The support of industry associations was used as a secondary strategy if the preliminary strategy failed to yield a sufficient number of responses.

4.4.4.2 Key informants

Key informants were managers who were knowledgeable about the supply chain and sustainability practices of their organisations. The intended participants were, therefore, the supply chain or operations managers. In the absence of such positions in the organisation, an appropriate respondent would be the purchasing, supplies or material manager, particularly in service firms which are a part of the manufacturing supply chain. In small and medium enterprises, the respondent was often the business owner. Multiple respondents were targeted from the same firm whenever possible.

4.4.4.3 Questionnaire distribution

The questionnaire was distributed electronically. The contact details of the target respondents were compiled by the researcher after approaching the selected firms. The link to the online questionnaire was e-mailed to the target respondents with an e-mail invitation (see Appendix C), accompanied by the information sheet (see Appendix E). Participation in the study was voluntary. The anonymity of the respondents was assured during and after the study. The questionnaire was distributed adhering to the conduct of responsible research. The questionnaire is provided in Appendix H.

4.4.4.4 Response rate

After distributing the online questionnaire to 1000 respondents, only five completed questionnaires were received at the end of the second week. Another 15 were received after sending reminders to the non-respondents in the first round. The response rate was two percent. Due to the low response rate, the secondary strategy of canvassing through industry associations was applied to reach the target sample size. 197 additional questionnaires were received from the secondary strategy. The questionnaires received during the pilot study (13) were also combined with the survey questionnaires (5+15+197). As a result, there were 230 questionnaires in total for preliminary analysis.

4.4.4.5 Non-response bias

Non-response bias tests were used to test for differences between respondents and non-respondents to the survey (Mentzer & Flint 1997). One method is to inspect for significant differences between the responses received in the early and later waves of the survey (Armstrong & Overton 1977). It is assumed that the late respondents are more likely to represent those who did not respond and, therefore, can be used to predict non-respondent cases (Armstrong & Overton 1977). Therefore, non-response bias was

examined by comparing the demographic variables of the early and late respondents (e.g., industry, stage in the manufacturing supply chain, number of employees, ownership) via a *t*-test. The result yielded no statistically significant differences among the demographic variables at $p < 0.05$. The results suggest that non-response bias was not a concern in this study.

4.4.5 Quantitative data analysis

The next step was to enter the survey responses into the data analysis software and perform statistical tests. Data were analysed using SPSS 21 and AMOS 21 software packages. SEM was applied as it is suitable for investigating the plausibility of a theoretical model that explains the interrelations among variables (Hu & Bentler 1999). Before proceeding with the statistical analysis, data were screened for SEM analysis by examining characteristics such as sample distribution and outliers. The analysis stage comprised a two-step method for the SEM approach proposed by Anderson and Gerbing (1988) which tests for measurement model and structural model. This two-step method is widely acceptable for model testing (Hair et al. 2010). The following section details the procedures applied in the statistical analysis.

4.4.5.1 Preliminary analysis

At this stage, the raw data were transformed to a format suitable for analysis. The steps included entering and screening the data, treating for missing values and finally, verifying sample characteristics, such as outliers and normality.

4.4.5.1.1 Data entry and screening

Data screening is an important preliminary step in SEM to verify the suitability of the sample. Once the survey was completed, the questionnaire responses were directly exported to SPSS 21 from Qualtrics software. A feature in Qualtrics is that it exports items with numerical codes while leaving the unanswered items blank. As a result, the researcher had only a limited number of items to code after exporting to SPSS. Only the questions in Section A of the questionnaire were coded.

A case number was assigned to each questionnaire and all e-mail addresses were removed at this stage. The answers that appeared in the other category to the questions in Section A were also coded. The response value of eight was considered as missing data. The negatively coded items in Sections B–F of the questionnaire (measuring the

constructs) were carefully recoded to capture the respective positive responses. For negatively coded items, the response value eight, which represents the missing data, were converted to zero after recoding for positive values. When the coding and recoding of items had been completed, the scores and the codes were rechecked against the original dataset. Each case was evaluated for the suitability of the analysis. Those cases which were left unanswered or deemed to be spontaneously answered with the same choice throughout for all the questions in Sections B–F were also removed. Following this, missing data, outliers and distributional characteristics were examined.

4.4.5.1.2 Missing value treatment

Missing values have a profound effect on SEM analysis (Hair et al. 2010). Treatment for such issues is, therefore, important before proceeding with the analysis. Cases with missing data can be ignored if there is less than 10 percent of missing data for an individual case, or when the missing data occurs in a random fashion or the number of fully completed cases is sufficient for analysis (Hair et al. 2010). The treatment for missing values can be applied if the values have missing completely at random (MCAR) or missing at random (MAR) patterns (Allison 2003).

MCAR assumes that missing values are unrelated to the other variables in the sample, whereas, under the MAR conditions, the other measured variables in the sample cause missing values, but not the underlying value of the incomplete variable (Baraldi & Enders 2010). A test for MCAR is Little's MCAR value which indicates that the data are missing completely at random if the value is non-significant ($p > 0.05$) (Little 1988). Non-significant MCAR missing data show that the observed pattern does not differ from the missing random pattern and, therefore, no potential biases exist in the patterns of missing data completely at random (Allison 2003).

Statistical tests are unavailable for testing MAR. However, MAR can be inferred from a significant Little's MCAR value and whether the fact of being missing data of a variable is anticipated from the other variables (other than the dependent variables) in the separate variance *t*-test (Baraldi & Enders 2010; Tabachnick & Fidell 2007). Missing not at random or non-ignorable (MNAR) is inferred if the *t*-test shows that the fact of being missing is related to the dependent variables (Tabachnick & Fidell 2007).

If the missing values are concentrated within one set of variables that are not critical to the analysis, or if they are highly correlated with the other complete variables, those

missing variables can be deleted (Hair et al. 2010). A number of methods are available for treating missing values, such as listwise deletion, pairwise deletion, replacing missing values using mean substitution or regression and the model based methods, such as expectation maximisation (EM) and multiple imputation (MI) (Allison 2003; Baraldi & Enders 2010). Listwise deletion removes cases with missing data. This method is unsuitable for small samples as it further reduces the data available for analysis. Furthermore, the results lack generalisability to the population (Enders & Bandalos 2001). Pairwise imputation uses a variety of sample sizes for every imputation (Baraldi & Enders 2010). Both listwise and pairwise deletions are based on MCAR assumptions and introduce biased parameter estimates when the assumption is not fulfilled (Enders & Bandalos 2001; Muthén, Kaplan & Hollis 1987). The EM method is a maximum likelihood (ML) based estimation technique (Allison 2003). ML-based techniques are recommended in SEM applications as they provide unbiased results when data are MCAR or MAR (Allison 2003; Baraldi & Enders 2010; Muthén, Kaplan & Hollis 1987; Olinsky, Chen & Harlow 2003). Even with the data that are MNAR, ML-based approaches provide less biased results than the other methods (Allison 2003; Baraldi & Enders 2010).

4.4.5.1.3 Check for normality and outliers

The normality of the sample is significant in multivariate analysis (Hair et al. 2010). Normality demonstrates the degree to which the distribution of data conforms to a normal distribution. Non-normal data inflate goodness-of-fit statistics, underestimate standard errors and lead to rejection of true models (Anderson & Gerbing 1988; Muthén, Kaplan & Hollis 1987). Additionally, the estimation techniques used in SEM such as ML assume the normality of data, particularly multivariate normality (Lei & Lomax 2005; Olsson et al. 2000).

In determining multivariate normality, the univariate normality of each individual variable is tested first. Preserving univariate normality is no guarantee of multivariate normality, but it is a requirement for satisfying multivariate normality (Olsson et al. 2000). The univariate normality was verified with sampling distribution curves and the kurtosis and skewness values of the distributions. Kline (2010) recommends the cut-off values of kurtosis < 10 and skewness < 3 for normal distribution. After verifying the normality of each variable, multivariate normality was tested with Mardia's coefficient

of multivariate kurtosis. A coefficient greater than three indicates multivariate non-normality (Mardia 1970, 1974).

The resulting dataset was tested for any outliers. Outliers are unique combinations of characteristics that are different from other observations (Aguinis, Gottfredson & Joo 2013). The investigation of outliers is vital as it links to the normality and skewness of the measured variables (Shah & Goldstein 2006). These were checked with the Mahalanobis distance, which indicates how far a case is located from the intersection of the means of all the variables (centroid) (Tabachnick & Fidell 2007). A conservative level of significance for Mahalanobis distance is $p = 0.001$. This value was obtained from the χ^2 distribution table at the degrees of freedom equivalent to the number of manifest variables. The cases that were non-significant at $p < 0.001$ were removed from the sample (Gallagher, Ting & Palmer 2008; Tabachnick & Fidell 2007).

4.4.5.1.4 Combining cases of the same firm

After deleting the outliers, the data were checked for cases that represent the same firm. The responses received from the same firm were combined into a single case by obtaining the mean values of each item. Combining records of the same firm is important as the data analysis of this study occurred at the organisational level (Enticott, Boyne & Walker 2009; Han et al. 2006).

4.4.5.2 Statistical analysis

Upon completion of the preliminary analysis, the statistical analysis procedures were followed to test the hypothesised model. The analysis started with testing for measurement models which represent unobservable latent variables by the covariances among two or more manifest variables (also called observed/measured/indicator variables) (Byrne 2001; Hoyle 1995). A structural model indicates the causal direction among the latent variables (Byrne 2001). The latent variables are referred to as factors (Byrne 2001). Both the measurement models and the structural model were tested using the ML estimation method, which assumes univariate and multivariate normality of the observed data. However, researchers (e.g., Bollen 1989; Lei & Lomax 2005; Olsson et al. 2000; Shah & Goldstein 2006) have shown that ML is relatively unbiased if the data deviate moderately from normality.

In developing the measurement model, first, the sample was randomly divided into two separate sub-samples. One sub-sample was used as a calibration sample in measurement

model development, whereas the other sub-sample was utilised as a validation sample in testing the measurement model. The calibration sample was subjected to exploratory factor analysis and the validation sample was used in confirmatory factor analysis.

4.4.5.2.1 Exploratory factor analysis

Exploratory factor analysis (EFA) is a strategy used in determining the factor structure in which the method and the data specify the nature of the relationship (Hair et al. 2010). It reveals latent variables that cause manifest variables to covary (Costello & Osborne 2005). Only the shared variance of the variables appears in the solution, avoiding the inflation of estimates (Costello & Osborne 2005). Since the factors (latent variables) of the study are predetermined (i.e., agility, resilience, social sustainability, environmental sustainability and economic sustainability), the EFA was used to confirm the loadings of the manifest variables (items) for respective latent variables.

The sample was evaluated for the adequacy of its size before proceeding with EFA. Sample size is determined by the nature of the data (Costello & Osborne 2005). Even small samples provide accurate results when there are no cross-loaded items (0.32 or more factor loadings on two or more factors) and have items with high communalities (greater than 0.8) and high factor loadings (greater than 0.5) (Costello & Osborne 2005). Due to the difficulty in satisfying these criteria, the variable-to-subject ratio was followed in evaluating sample size. Obtaining a higher ratio per variable is desirable to minimise the chances of over fitting the data (Costello & Osborne 2005). Kline (1999) suggested a ratio of 2:1 for a sample with at least 100 items. The ratio 2:1 is used in this study to determine the adequacy of sample size for EFA.

Next, the presence of sufficient correlations in the data matrix for factor analysis needs to be justified. This was verified with the Kaiser-Meyer-Olkin (KMO) measure and Bartlett's test of sphericity. The KMO value examines the sampling adequacy (Hair et al. 2010). A KMO value greater than 0.6 is an indication of the adequacy of the factor structure for analysis (Kaiser 1974). Bartlett's test of sphericity examines for any significant correlations in the correlation matrix with at least some of the variables (Hair et al. 2010; Yong & Pearce 2013). Furthermore, factor analysis is inappropriate if the substantial number of correlations is less than 0.3 (Hair et al. 2010; Tabachnick & Fidell 2007) and partial correlations are higher than 0.7. The partial correlations were examined from the anti-image matrices (Hair et al. 2010).

For EFA, principal axis factoring (PAF) was performed as the factor extraction method with direct oblimin oblique rotation. Factors were extracted using oblique rotation as this method considers the correlation of factors in factor extraction (Hair et al. 2010).

The number of factors was determined by the Kaiser criterion (eigenvalue greater than one). However, this method has been criticised as being less accurate in selecting a number of factors (Fabrigar et al. 1999; Kline 1999). The answers obtained from the Kaiser criterion were, therefore, verified with the scree plot test. A scree plot is a graph of eigenvalues which indicates the point where the data points curve before flattening out. The number of data points above the curve denotes the number of factors to be retained (Costello & Osborne 2005; Hair et al. 2010). The unidimensionality of the factors is verified if the results show a single factor of an eigenvalue greater than one and a single data point above the break in the scree plot.

In the analysis, if more than one factor was identified from the factor analysis, the factor loadings of the each manifest variable were examined in the pattern matrix. This matrix is suitable to examine the factor structure with oblique rotation (Costello & Osborne 2005). The variables with factor loading values greater than 0.3 are better representations of the factor structure (Costello & Osborne 2005). Care was taken to remove cross-loaded items and to avoid factors with less than three items as they do not reveal the data structure properly (Costello & Osborne 2005).

Results of the EFA analysis were used to determine the suitability of the manifest variables to represent latent variables. This was verified with the value of communalities and factor loadings (Fabrigar et al. 1999; Hair et al. 2010; Kline 1999). Communality is the proportion of variation among the manifest variables that can be explained by the measurement model (Hair et al. 2010). This is calculated as the square of the standardised construct loadings (Yong & Pearce 2013). A communality value that is less than 0.3 indicates a low shared variance of the item among the total variance of items represented by the factor (Hair et al. 2010). Such items are hence candidates for deletion. Following the rule of thumb, the value of 0.3 was considered as the cut-off level, but items with values closer to 0.3 were retained if they were justified by theory (Kline 1999).

4.4.5.2.2 Confirmatory factor analysis

Confirmatory factor analysis (CFA) was performed to verify the factorial validity of the results obtained from the EFA (Yong & Pearce 2013). CFA considers manifest variables and factors together with path analysis to test a hypothesis (Yong & Pearce 2013). CFA was performed for measurement models. The measurement models were tested at two stages; initially for the individual latent variables and then for the model that contains all the latent variables (Anderson & Gerbing 1988). The measurement models for individual latent variables are known as congeneric models whereas the latter is referred to as the full CFA model. The measurement models specify how manifest variables represent the latent variable (Hair et al. 2010). Subsequently, the results obtained from the full CFA model were assessed for reliability and validity (Byrne 2001; Schumacker & Lomax 2004).

4.4.5.2.3 Reliability

Reliability attests the stability and consistency of measures of a concept (Sekaran 2006). Internal reliability is the most acceptable consistency measure for multiple-item measures (Bryman 2008) which indicates the homogeneity of items (Sekaran 2006). The highly recommended internal reliability measure is Cronbach's alpha value which considers all the possible split-half reliability coefficients of measures for a concept to assess reliability. Cronbach's alpha values of 0.7 or above represent the desirable reliability level (Hair et al. 2010; Nunnally & Bernstein 1994).

In addition, composite reliability values were calculated for each construct using the following formula given by Hair et al. (2010). A composite reliability higher than 0.7 is desirable (Hair et al. 2010).

$$CR = \frac{\left(\sum_{i=1}^{n} L_i\right)^2}{\left(\sum_{i=1}^{n} L_i\right)^2 + \left(\sum_{i=1}^{n} e_i\right)} \qquad \text{(Equation 1)}$$

L_i = Standardised factor loading of the ith item

e_i = error variance terms of the ith item

4.4.5.2.4 Validity

Validity is an indication of the precision of the measurement items in capturing the concept correctly (Bentler & Bonett 1980; Bryman 2008; Sekaran 2006). Several types of validity were examined including content and construct validity.

Content validity represents the presence of sufficient and adequate measures to capture a construct. An approach to assure content validity is face validity. Face validity is an evaluation of the measurement items for their ability to apprehend the concept (Sekaran 2006). Face validity was assessed by the knowledge experts.

The construct validity was confirmed by testing for the convergent and discriminant validity. Convergent validity measures the degree to which manifest variables of the same concept are correlated (DeVellis 2012). Discriminant validity assesses the extent to which a construct is distinct from other constructs (Hair et al. 2010). Convergent validity was observed using the average variance extracted (AVE) value. AVE value exceeding 0.5 indicated the convergent validity of the measurement (Hair et al. 2010). The discriminant validity of the measurement scale was examined by the correlations among the latent variables. It was tested by comparing the square root of the AVE values with the correlations between each pair of constructs. The value for the square root of the AVE extracted that was larger than the correlation of the two constructs provides evidence of discriminant validity (Fornell & Larcker 1981). AVE values were calculated using the following formula given by Hair et al. (2010).

$$\text{AVE} = \frac{\sum_{i=1}^{n} L_i^2}{n} \qquad \text{(Equation 2)}$$

L_i = Standardised factor loading of the ith item

4.4.5.2.5 Common method bias

Consideration was given to reducing the common method bias to enhance the validity and reliability of the measures. The common method bias inflates the relationships between variables due to variance attributable to the method used in data collection (Chang, Witteloostuijn & Eden 2010; Conway & Lance 2010). Method biases cause measurement errors and hence distort the validity of the results (Podsakoff et al. 2003). Since this study employed self-administered questionnaires, the results can be affected by common method bias. Data collected from the same participant, at the same time using self-administered questionnaires with perceptual measures, are likely to be influenced by common method bias (Chang, Witteloostuijn & Eden 2010). Furthermore, the nature of the questions can increase the social desirability bias since they inquire about supply chain best practices and sustainability practices.

Multiple remedies are recommended to control the method bias during various stages of the study (Chang, Witteloostuijn & Eden 2010). To rectify the effects of a single respondent answering the survey instrument, multiple respondents from the same firm were encouraged wherever possible. The questions were worded with care to reduce the social desirability bias. Another approach was the use of negatively worded questions to discourage answering in the same pattern (Meade, Watson & Kroustalis 2007). Even though the use of negatively worded items has been criticised for their weak correlations with other items (DeVellis 2012; Podsakoff et al. 2003), some researchers have stressed the importance of carefully designed negatively worded items to resolve method bias (Churchill 1979; MacKenzie & Podsakoff 2012; Weijters & Baumgartner 2012). Following the guidelines proposed by Weijters and Baumgartner (2012), care was taken during the design stage by alerting the respondents with highlighted negative words, scattering negatively worded items throughout the questionnaire and using those items only when necessary. Furthermore, to reduce bias, a scale with a mid-point was used, and ambiguous and double-barrelled questions were avoided.

In addition to the aforementioned procedural remedies, statistical methods were applied to test for common method bias. Harman's single-factor test was applied, as suggested by Podsakoff et al. (2003), which utilises EFA and CFA approaches (Malhotra, Kim & Patil 2006). In an EFA-based test, common method bias is present if the results show a single factor solution or if one factor accounts for the majority of covariances among the measures. The CFA-based test loads all the manifest variables into a single latent variable. Common method bias is present if the new model fits the data better than the original model (Hult et al. 2006; Malhotra, Kim & Patil 2006).

4.4.5.2.6 Measurement invariance

A measurement invariance test was conducted to ensure that the measurement models have the same meaning across different groups of respondents (Hair et al. 2010). This verification is essential as the sample represents firms of different sizes and various industry groups within the manufacturing supply chain. A multi-group analysis was conducted to test for measurement invariance.

To examine measurement invariance, a series of models was compared with increasingly restrictive constraints, starting with the most unconstrained model (Byrne 2001). In the most unconstrained model, the parameter estimates are unique between

groups. Then, the between-group constraints were added by constraining the estimates to a single parameter for each group, which represent equal measurements (Byrne 2001). Testing for metric invariance is required to ensure that the factor loadings for constructs among all the groups are similar (Cheung & Rensvold 2002). The factor loadings were set to equal among the groups and the χ^2 difference of the models was checked for significance, where a non-significant value indicates a measurement invariance (Hair et al. 2010). In addition, the difference of CFI of the models was examined. A CFI difference of less than or equal to -0.01 indicates a measurement invariance (Cheung & Rensvold 2002).

4.4.5.2.7 Structural analysis

In SEM, structural analysis reveals the direct and indirect relations among the latent variables (Byrne 2001). It describes the explained and the unexplained variance in the model. The structural model assesses the nomological validity (Byrne 2001; Schumacker & Lomax 2004). The structural paths were examined for sign, magnitude and path coefficients (Shah & Goldstein 2006).

4.4.5.2.8 Evaluation and respecification of the models

The SEM models were assessed for the overall model fit and for the internal structure of the model. If the model fits were unsatisfactory, they were altered to improve the fit. Model fit examines the similarities between the implied and observed covariance matrices (Hoyle 1995). The overall model fit is evaluated with preliminary evaluation criteria and global measures. All the models such as the congeneric models, measurement models and the structural models were evaluated in this manner.

a. Preliminary fit assessment

Preliminary fit assessment criteria evaluate the models for any anomalies in the output that lead to improper solutions (Bagozzi & Yi 1988). Negative error variances, correlations greater than one or closer to one, extremely large or small parameter estimates and large standard errors were examined here (Bagozzi & Yi 1988; Byrne 2001).

The examination of path estimates and their significance is important to determine the appropriateness of the model (Bagozzi & Yi 1988; Schumacker & Lomax 2004). Therefore, the sign, strength and the significance of the path estimates are imperative in this regard (Byrne 2001; Shah & Goldstein 2006). The sign is the positive or negative

association of the manifest variables to the latent variable, which shows the direction of the relationship. The strength is the magnitude of the parameter estimates. The statistically significant parameter estimates reflect the association of the manifest variable to the latent variable. Values greater than 0.5 for standardised values are recommended for factor loadings (Hair et al. 2010). The associated standard errors of the path estimates should be small as they indicate the stability of the parameters (Shah & Goldstein 2006). Standard errors of less than 0.4 are preferable (Bagozzi & Yi 1988) and non-significant parameters can be removed (Byrne 2001). In addition, for measurement models, values greater than 0.4 are appropriate for squared multiple correlations for manifest variables (Hair et al. 2010).

The anomalies are caused by errors in model specification, problems of model identification or incorrect input (Bagozzi & Yi 1988). The possible causes were scrutinised before evaluating the global fit measures. The identification relates to the presence of a unique set of parameters consistent with the data (Byrne 2001). Therefore, to satisfy the identification requirements, the number of parameters to be estimated should be equal or exceed the number of available data points (i.e. variances and covariances of the manifest variables) (Hair et al. 2010).

b. Model fit assessment

Model fit is a comparison of the sample covariance matrix with the estimated population covariance matrix (Ullman 2007). The accuracy of the model fit was verified by the model fit indices. There are three types of fit indices: absolute, incremental and parsimonious (Schumacker & Lomax 2004). The absolute fit indices show the extent to which the estimated model regenerates data (Hu & Bentler 1999). The model is compared to a saturated model that exactly regenerates the observed covariance matrix (Hu & Bentler 1995). The incremental fit indices compare model fit improvement with a baseline model (Hu & Bentler 1998; Schumacker & Lomax 2004). These are also known as comparative fit indices (Hu & Bentler 1999). The parsimonious indices allow the selection of a less complex model with a few free parameters (Blunch 2013; Hu & Bentler 1995). Parsimony is the number of estimated parameters needed to achieve a specific fit level (Schumacker & Lomax 2004). These indices are used to compare alternative models that are not nested (Hair et al. 2010). The model fit indices have no single statistical test that indicates the model's accuracy, except the χ^2-test (Schumacker & Lomax 2004). Fit indices can reveal a large proportion of model misspecification and

are minimally influenced by sample size, distribution and estimation method (Hu & Bentler 1998). A variety of absolute, incremental and parsimonious fit indices were, therefore, adopted to assess the overall model fit (Hu & Bentler 1999). The indices available for model evaluation are detailed in Table 4.6.

Table 4.6 Absolute, incremental and parsimonious model fit indices

Index	Description
Absolute fit indices	
χ^2- statistic	A significant χ^2 value relative to the degrees of freedom indicates the presence of differences between observed and estimated matrices. χ^2 value of zero indicates a perfect fit, which reflects that the implied and observed matrices are equal. Smaller χ^2 values indicate better fit (Hu & Bentler 1995). In SEM, a non-significant χ^2 suggests that the hypothesised model is not significantly different from the observed model (Schumacker & Lomax 2004). This test is sensitive to sample size (Anderson & Gerbing 1988; Bagozzi & Yi 1988) and multivariate non-normal data (Hu, Bentler & Kano 1992; Schumacker & Lomax 2004). A larger sample tends to increase the chances of rejecting a true model, while a smaller sample tends to accept invalid models (Bagozzi & Yi 1988). Bootstrapping was performed to obtain the χ^2 and *p* values if the sample was non-normal (Bollen & Stine 1992). The Bollen-Stine *p* value represents a bootstrap modification of the normal χ^2. This method provides better results under higher multivariate kurtosis conditions (Ory & Mokhtarian 2010). A value higher than 0.05 indicates no differences between estimated and observed variance or covariance matrices.
Root mean square of approximation (RMSEA)	RMSEA measures the lack of model fit in association with a perfect (saturated) model (Ullman 2007). A value closer to 0.06 is acceptable. A value ranging from 0.08 to 1 indicates a mediocre fit and a value higher than 0.1 indicates a poor fit (Byrne 2001). RMSEA is less preferable at the ML estimation for small samples as true-population models are over rejected (Hu & Bentler 1998, 1999). The choice of estimation method affects the RMSEA value (Ullman 2007). This criterion is not recommended for small samples (n <= 250) (Hu & Bentler 1998, 1999).
Standardised root mean square residual (SRMR)	This index reflects the average residual between the observed and estimated variance and covariance matrices (Ullman 2007). The figure can be used to compare different models of the same data (Bagozzi & Yi 1988). A value less than 0.8 indicates a good fitting model (Hu & Bentler 1998). It is less sensitive to sample size and distribution. This criterion is recommended for small samples (n <= 250) (Hu & Bentler 1998).
Goodness-of-fit index (GFI)	GFI is the ratio of the sum of the squared differences between the observed and hypothesised matrices to the observed variances (Schumacker & Lomax 2004). The value ranges between zero and one. It increases as the goodness-of-fit and the sample size increase. For small samples, GFI value decreases when the number of indicators per factor or the number of factors in the model increases (Anderson & Gerbing 1984). This index, therefore, performs poorly in small samples (n <= 250) (Hu & Bentler 1995). *Continued on next page*

Table 4.6 Continued

Index	Description
Adjusted goodness-of-fit (AGFI)	This is the GFI adjusted for the number of degrees of freedom relative to the number of parameters (Byrne 2001). AGFI indicates the relative amount of variances and covariances that are jointly accounted for by the hypothesised model (Bagozzi & Yi 1988). The figure ranges between zero and one. The value of 0.9 indicates the cut-off for model selection. The value increases as the goodness-of-fit increases. This is influenced by sample size, but is insensitive to the multivariate normality of the data (Hu & Bentler 1999). This index over-rejects models for small samples (Hu & Bentler 1995).
Incremental fit indices	
Comparative fit index (CFI)	The values of CFI ranges from zero to one and values higher than 0.9 represent an adequate model fit (Bentler & Bonett 1980). This index is preferable even for small samples (n<=250) (Hu & Bentler 1998). It is also less sensitive to the type of data distribution. This index has shown moderate sensitivity to simple model misspecification while it is very sensitive to complex model misspecification (Hu & Bentler 1998).
Normed fit index (NFI)	NFI compares the χ^2 value of the model with the χ^2 value of the independent model and evaluates the estimated model (Ullman 2007). This value ranges from zero to one. A value greater than 0.90 indicates a well-fitting model (Hu, Bentler & Kano 1992). This index underestimates the fit in small samples (Hu & Bentler 1999). While moderately sensitive to complex model misspecification, it is less sensitive to simple model misspecification (Hu & Bentler 1998).
Tucker-Lewis index (TLI)	This index, also named the non-normed fit index (NNFI), is an adjusted NFI to the degrees of freedom (Ullman 2007). The value ranges from zero to one. The value zero indicates a no-fit, whereas the value one represents the perfect model fit. The cut-off value is 0.90 (Bentler & Bonett 1980). This index tends to reject models for small samples at the ML estimation. This index is moderately sensitive to simple model misspecification and has demonstrated high sensitivity to complex model misspecification (Hu & Bentler 1998).
Model parsimonious indices	
Normed χ^2	Normed χ^2 is the ratio between χ^2 and the degree of freedom (χ^2/df). It identifies inappropriate models that are overidentified and capitalises on chance or indicates the models which do not fit the observed data (Schumacker & Lomax 2004). Values less than 1 indicate over-fitted models whereas higher values (>3.0–5.0) indicate under-parameterised models. The models with values between one and two indicate good fitting models (Bollen 1989).
Akaike information criterion (AIC)	This index is used to compare two models with different numbers of latent variables; a value closer to zero indicates a more parsimonious model (Schumacker & Lomax 2004). This value is related to degree of freedom and does not consider the sample size (Byrne 2001). This index is more suitable to compare models that are not nested (Ullman 2007).

c. Model respecification

The models are respecified if any misspecifications are observed. Model misspecification is examined by the standardised residual values and modification indices (Byrne 2001). Standardised residuals describe the amount of variance unexplained in the hypothesised model (Bagozzi & Yi 1988). Any values higher than 2 ($p < 0.005$) are undesirable and indicate that the model fails to explain much of the shared variance between the items (Hair et al. 2010).

The modification index indicates the amount by which the χ^2-statistic of the model decreases if a particular path (which is currently fixed to zero) is freely estimated (Kline 2005). At the 0.05 significance level, the modification index with a value higher than 3.84 can significantly improve the model (Hair et al. 2010). However, the improvement based on modification indices can capitalise on chance only. Modifications to the model, therefore, should be supported by theoretical or methodological justifications (Bagozzi & Yi 1988; Schumacker & Lomax 2004).

4.4.5.2.9 Hypotheses testing

The hypotheses developed in Chapter 3 were tested using the final structural model. A *t*-value greater than 1.96 indicates significant paths at $p < 0.05$. R^2 values were used to assess the proportion of variation in the latent variables explained by the manifest variables. Larger R^2 values show high correlations with the manifest variables (Bagozzi & Yi 1988).

4.5 Chapter summary

This chapter set out the methodology employed in this study. It justified the use of a mixed methods approach and elaborated the associated methodologies. The chapter discussed the two phases adopted in this study. Semi-structured interviews were conducted in the qualitative study, while an online survey method was employed in the quantitative study. The steps followed in analysing qualitative data to derive themes were also presented. The qualitative study assisted in the development of the data collection instrument for the subsequent study, which empirically investigated the impacts of agility and resilience on sustainability. The scale items and the questionnaire were prepared and subjected to validation techniques. The online questionnaire was sent to the respondents, who were selected using a stratified random sampling technique.

After cleaning, the data were tested for the measurement and structural models. The chapter concluded by detailing the SEM methodology, the model fit indices and the tests used to evaluate the hypotheses. The next two chapters present the findings from the two phases.

5 Qualitative research findings

5.1 Introduction

Chapter 4 described the methodology for this study, justifying the need for a mixed methods approach to answering the research questions; the chapter also detailed the procedures adopted to conduct the qualitative and quantitative phases and data analysis methods.

This chapter presents the findings of the qualitative study. The objective of this chapter is to answer research question 1 (What are the attributes of supply chain agility and resilience in firms in the Australian manufacturing sector?) and research question 2 (What sustainability practices are present in firms in the Australian manufacturing sector?). The data obtained through the 31 interviews conducted with managers in Australian manufacturing firms were supplemented by field notes and the firms' sustainability reports, annual reports and websites. The findings further helped to validate the scales proposed to measure the constructs in Chapter 4 (see Section 4.4.2).

Various themes were identified around the main constructs following the steps described in the preceding chapter. First, the interviews were coded using NVivo 10 by grouping similar data and assigning them into nodes; these were later combined into broad themes. This process resulted in four main themes each for supply chain agility, social sustainability and environmental sustainability, and three main themes each for resilience and economic sustainability. A sample of codes created for the analysis is provided in Appendix I. The following section provides a brief overview of the firms studied and the rest of the chapter discusses the themes in detail.

5.2 Profile of the firms

This section provides an overview of the firms interviewed. Table 5.1 presents a summary of the firms' characteristics. Any information not available is indicated as n/a.

Reports from the parent firm were referred to in the absence of sustainability or annual reports for the subsidiary firm operating in Australia. This is indicated within brackets as a group report for the respective firms. A brief description of each firm can be found in Appendix K.

Table 5.1 Profile of the firms interviewed

Firms	Firm type	Ownership	Year established	State	Firm size (no. of employees)	Managers interviewed	Sustainability report available	Annual report available
Food processing								
1	Public company, Subsidiary of a group	Local	1840	SA	2000	Operations manager	No	Yes
2	Proprietary company	Local	1991	SA	20	General manager	No	No
3	Cooperative	Local	1978	NSW	480	Senior operations manager	No	No
4	Proprietary company	Foreign	1929	VIC	660	National environment manager	Yes	No
5	Proprietary company	Local	1988	SA	1626	Supply chain coordinator	No	No
Beverages								
6	Proprietary company	Local	1839	SA	420	Supply manager	No	No
7	Proprietary company	Foreign	1840	NSW	6746	Supply chain director	Yes	No
Clothing and footwear								
8	Proprietary company	Local	1932	SA	600	Engineering services manager	No	No
Wood products								
9	Proprietary company	Local	1990	SA	n/a	Director	No	No
Pulp, paper and paperboard								
10	Public company	Local	1920	VIC	688	Senior procurement manager	No	Yes
Printing								
11	Public company, Subsidiary of a group	Foreign	1958	VIC	198	Parts and logistics manager	No	No

Continued on next page

Table 5.1 Continued

Firms	Firm type	Ownership	Year established	State	Firm size (no. of employees)	Managers interviewed	Sustainability report available	Annual report available
Petroleum								
12	Subsidiary of a proprietary company	Foreign	1919	VIC	7213	General manager-supply	Yes	No
Basic chemical								
13	Subsidiary of a group, public company	Foreign	1886	NSW	2403	Regional commodity manager	Yes (Group)	Yes (Group)
14	Subsidiary of a proprietary company	Foreign	1923	NSW	930	Supply chain manager	Yes	Yes (Group)
15	Public company	Local	2003	VIC	5286	Vice president global supply chains	Yes	Yes
16	Subsidiary of a proprietary company	Foreign	2006	VIC	180	Supply chain manager	Yes (Group)	No
17	Public company	Local	1998	NSW	1900	Procurement manager	No	Yes
Polymer and rubber								
18	Proprietary company	Local	1989	SA	60	Procurement manager	No	No
19	Public company	Local	2002	VIC	2200	Procurement manager	No	Yes
Non-metallic minerals								
20	Public company	Local	1855	NSW	3134	Group supply chain manager	Yes	Yes
21	Public company	Foreign	1888	NSW	3178	Strategic sourcing and supply chain manager	No	Yes

Continued on next page

Table 5.1 Continued

Firms	Firm type	Ownership	Year established	State	Firm size (no. of employees)	Managers interviewed	Sustainability report available	Annual report available
Prefabricated metal								
22	Subsidiary of a proprietary company	Foreign	2006	VIC	413	Supply chain manager	Yes (Group)	No
23	Proprietary company	Foreign	1966	NSW	382	Group purchasing manager	No	No
Automotive								
24	Subsidiary of a proprietary group	Foreign	1987	VIC	729	Communication and marketing lead officer	Yes (Group)	Yes (Group)
25	Subsidiary of a proprietary company	Foreign	1958	VIC	3982	Divisional manager (Production control)	Yes	No
26	Subsidiary of a group	Foreign	2004	SA	n/a	Business development and purchasing manager	No	Yes (Group)
Machinery and equipment								
27	Public company	Local	1922	NSW	3560	Group supply manager	Yes (included in the annual report)	Yes
28	Public company	Local	1987	NSW	2632	Vice president (Manufacturing and logistics)	Yes (included in the annual report)	Yes
29	Public company	Local	1959	SA	500	Group materials manager	No	Yes
30	Subsidiary of a proprietary group	Foreign	1940	VIC	878	Strategic and country procurement manager	Yes (Group)	No
31	Subsidiary of a proprietary group	Foreign	2009	VIC	469	Procurement manager	No	No

5.3 Supply chain agility

Four themes emerged in connection with supply chain agility. These themes are: 1) Identifying changes, 2) Adopting various sources of information about these changes, 3) Responding to changes in a timely manner, and 4) Embedding flexibility into operations. These aspects represent the attributes of supply chain agility which answer research question 1: What are the attributes of supply chain agility and resilience in firms in the Australian manufacturing sector? The themes also validate the scale items proposed to measure supply chain agility in the quantitative survey of this study.

5.3.1 Identifying changes

Interviewees in the sample identified changes in demand and supply and other changes that have strategic implications for the firms' operations.

5.3.1.1 Demand changes

All of the firms studied demonstrated that identifying changes in demand is an attribute of supply chain agility. The interviewees stated that timely capturing of changes in demand is vital for responsiveness. However, only Firm 6 (Beverages), Firm 7 (Beverages), Firm 8 (Clothing and footwear), Firm 21 (Non-metallic minerals) and Firm 26 (Automotive) demonstrated capturing of real-time demand information. For example, Firm 6 (Beverages) and Firm 7 (Beverages) collaborate with retailers to collect real-time shopper data in response to intense competition in their consumer markets. Firm 8 (Clothing and footwear), Firm 21 (Non-metallic minerals) and Firm 26 (Automotive) frequently update demand information with wholesalers and retailers. These findings suggest that firms with highly varying product requirements (for example, product sizes, mixes, specifications or irregular delivery times) have a particular need to capture demand information in real time. For these firms, relationships built with downstream firms have enabled timely capturing of demand information, confirming previous findings that relationships provide a basis for exchange of reliable information and for cooperation in response to demand (Yang 2014).

Other studies have also confirmed that identifying demand changes is an important characteristic in supply chain agility (Braunscheidel & Suresh 2009; Li, Goldsby & Holsapple 2009; Yusuf et al. 2014a). Li, Goldsby and Holsapple (2009), in developing a

scale for supply chain agility, emphasised the importance of detecting changes in demand at appropriate times. Since agile supply chains are demand-driven, firms need demand information in order to meet customer requirements (Christopher, Lowson & Peck 2004).

5.3.1.2 Supply changes

Fourteen firms in this study reported that they identified changes in short-term and medium-term supply and the supplier industry-level changes in a timely manner. For example, the manager in Firm 18 (Polymer and rubber) said that the firm receives information promptly about any shortages or delays in the supply of materials. This enables the firm to adjust production schedules to meet demand. Firm 31 (Machinery and equipment) receives reports from its suppliers on the market indicators of their customer firms. This information aids in estimating suppliers' capacity over a given period and adjusting the firm's purchasing plans or safety stock levels. Knowing suppliers' medium-term capabilities and capacities enables the firm to act proactively to minimise the impact of medium-term supply shortfalls.

Identifying suppliers' industry-level changes was seen in Firm 13 (Basic chemical), Firm 23 (Prefabricated metal), Firm 27 (Machinery and equipment) and Firm 30 (Machinery and equipment). Industry-level information is significant for these firms since their supplies are commodity items, such as metals and minerals, for which markets fluctuate constantly. For instance, Firm 23 (Prefabricated metal) monitors exchange rate fluctuations and their impacts on steel prices to make the best possible decision about purchasing materials at the lowest cost. Detecting changes in supplier industries in a timely manner, therefore, assists firms to prevent material shortages and to reduce purchase costs. Consequently, the firms can deliver customer requirements at reasonable prices.

The firms that did not demonstrate identification of supply changes in advance either had responsive suppliers who could always reliably meet the firms' demand requirements or back-up suppliers to whom they could easily switch to during periods of supply uncertainty.

The findings show that firms can monitor short- and medium-term supply fluctuations because they have built close relationships with a few key suppliers and can recognise

patterns of supply over time, thus circumventing any potential shortages. This finding is in line with Christopher (2000) who suggests that firms build strong relationships with a few strategic suppliers, and continuously exchange demand and supply information to quickly and collaboratively respond to customer requirements. Supply uncertainties cause material shortages leading to the inability to meet demand. Collating information about inventory levels at suppliers is, therefore, an important way to respond to demand (Christopher 2000). Previous studies have stressed that monitoring fluctuations in supply is a way to achieve supply chain agility (Christopher 2000; Li et al. 2008). The findings in this study also suggest that identifying supply changes in a timely manner is an attribute of supply chain agility.

5.3.1.3 Changes of a strategic nature

The firms also identified changes that have strategic implications for their operations. For instance, the manager in Firm 30 (Machinery and equipment) shared his experience with demand fluctuations caused by the financial crisis in Europe:

> There was quite a bit of fluctuation [in demand] because of the global recession [in 2008] in Europe. Some of the factories in Europe were closed down. As a result, we [got the opportunity] to export cable from Australia [to Europe] and that was a sudden peak in our manufacturing. (Firm 30, Machinery and equipment)[1]

In another example, the manager in Firm 24 (Automotive) pointed out that free trade agreements had increased the importation of European vehicles into Australia, thus creating a new market segment for small vehicles in the Australian automotive industry.

These findings show evidence that firms in the sample identify changes in business environments that could affect a firm's operations by creating opportunities and challenges.

Changes in the wider business environment can also have strategic implications for industries in which the focal firms, suppliers and customers operate. Consequently, firms need information about current directions of the business environment so they can identify how these could affect supply and demand in their industry sector, as well as their suppliers' and customers' industries, in the future. The interviewees expressed their

[1] The interviewer referred to the global recession in 2008. The interview was conducted on 15 November 2014.

awareness of business environmental factors that can affect their suppliers' and customers' industries. For example, the demand for Firm 17's (Basic chemical) products — such as paints, plastering and sealing agents — is affected by new construction projects in the building industry. The manager is, therefore, aware of the prevailing economic and financial conditions nation-wide, as these factors affect the types and the numbers of construction projects. Understanding such changes within customer industries thus enables the firm to adjust its strategies and resources to respond to long-term demand patterns.

Similarly, Li, Goldsby and Holsapple (2009) stressed that strategic alertness (which they defined as identifying changes in the business environment, such as economic, political and social changes, demographic trends, or technological advances) is an important attribute of supply chain agility. Change to any of these factors affects market conditions and creates both opportunities and challenges for firms to respond (Sharifi & Zhang 2001). The findings suggest that identifying changes of a strategic nature is an attribute of supply chain agility.

In summary, one key attribute of supply chain agility identified in this study is that firms monitor changes in demand, supply and the changes of strategic nature in a timely manner. This finding aligns with the studies which found that identifying market changes is important to being responsive (Christopher, Lowson & Peck 2004; Gligor, Holcomb & Stank 2013; Yusuf et al. 2014a). Firms capture information about supply changes when they have a strong relationship with key suppliers or when their supply industries significantly fluctuate. Early identification enables firms to assess the impacts of changes on their operations and to then introduce operational and strategic level changes in response. In that process firms become alert and responsive to change and can meet their customer requirements successfully. Therefore, identifying change is an important attribute of supply chain agility, justifying the following measures of supply chain agility in the quantitative survey: detecting changes in demand in a timely manner, detecting changes in supply in a timely manner and detecting strategic opportunities and challenges in a timely manner (see Table 4.3).

5.3.2 Adopting various sources of information about changes

As this study reveals, all the firms in the sample receive information from customers. For example, a manager in Firm 5 (Food processing) has regular discussions with staff in large supermarkets and distribution networks, including some in Europe and the USA. In the food industry, customer expectations change frequently and also social, technical and economic changes may influence industry operations (Bigliardi & Galati 2013). These discussions can gather information about changes occurring in customer markets and in the firm's downstream operations. For example, regular visits to and from customer firms in the Middle East (Dubai) enables Firm 25 (Automotive) to understand cultural practices and sensitivities. Visits provide an opportunity for the firm to communicate its expectations and improve the visibility of its operations. Such sharing helps the focal firm to identify changes in product markets, recognise new market opportunities and also to understand the operations of customer firms in more detail.

However, it appears that collecting information from suppliers is not as frequent as collecting information from customers. Only the managers in Firm 5 (Food processing), Firm 10 (Pulp, paper and paperboard), Firm 11 (Printing), Firm 15 (Basic chemical), Firm 18 (Polymer and rubber), Firm 28 (Machinery and equipment) and Firm 31 (Machinery and equipment) stated that they work with suppliers to collect information about the suppliers' sites and practices. The managers in Firm 10 (Pulp, paper and paperboard) and Firm 18 (Polymer and rubber) visit suppliers' premises, which helps to set the firm's purchasing directions. Firm 15 (Basic chemical) has regular meetings with major suppliers to discuss supplier performance, issues and improvements. These firms have built relationships with key strategic suppliers enabling them to readily access information about suppliers' capabilities and issues. Firms can minimise the effects of supply changes on their ability to meet customer requirements by obtaining such information in advance wherever possible.

The findings show that firms with resourceful business partners mine them as a reliable source of market information. For example, Firm 2 (Food processing), as a small and medium-sized organisation, lacks the resources to carry out in-house research and development; however, it sources information about market trends and consumer behaviour

from the research and development teams of its large multinational customer firms. Obtaining market information through parent firms or business units overseas is also evident in Firm 12 (Petroleum), Firm 14 (Basic chemical) and Firm 30 (Machinery and equipment), which are multinational firms. These sources provide quick access to reliable market information.

Other information sources include industry associations and industry forums. These events provide the opportunity to network with others in the industry and to gather market information. For instance, in Firm 5 (Food processing), sales representatives attend overseas food exhibitions to network and acquire market information. These events provide opportunities for the firm to meet with its present and potential customers. This finding indicates that informal channels also play an important role in tapping into industry information.

The current study reveals that firms obtain information about changes from various sources. The most frequently used mechanism is seeking information from customers since it enables firms to capture changing customer requirements accurately. An example of this approach is visiting customer firms, particularly overseas customers' firms. Ladhari et al. (2011) also stated that visiting overseas customer firms is helpful since customers of different social-cultural backgrounds have different beliefs and preferences to which firms should respond. Furthermore, such visits provide the opportunity to share operational and strategic information between the focal firm and the customer firms, enabling them to better respond to changing market needs. Gligor and Holcomb (2012b) also found that sharing such information between the focal firm and customer firm is important to coordinate each other's activities to respond to market requirements. The study shows that those firms that have key strategic suppliers obtain information from them to respond to supply fluctuations. Firms also leverage the competencies of their business partners to capture market trends. The findings in this study also illustrate the use of informal communication channels. Even though Gligor and Holcomb (2012b) mentioned the possibility of using informal communication for supply chain agility, they did not test it.

Accurate and timely information about changes help these firms to meet customer requirements as stated by van Hoek, Harrison and Christopher (2001) and Yang (2014).

Even though previous studies have stressed the need for information sharing to promote supply chain agility, their focus was on information sharing among supply chain partners (Christopher 2000; Gligor & Holcomb 2012b; Yang 2014) and limited to integrated information systems and sharing operational data between buyers and suppliers (Christopher 2000; Swafford, Ghosh & Murthy 2008). In contrast, the findings of the current study demonstrate firms using different types of sources within and outside the supply chain to capture operational and strategic information.

In summary, firms secure and maintain a number of information sources to keep abreast of market changes. Firms rely on sources, such as customers, suppliers, business partners, industry associations and forums and utilise both formal and informal channels. These sources provide quick access to information about demand, supplies and upcoming market conditions, thereby allowing firms to prepare for how they will respond. The findings suggest that maintaining a range of information sources is a key attribute of supply chain agility and support the following item in the quantitative survey: uses various sources of information to keep abreast with changes to measure supply chain agility.

5.3.3 Responding to changes in a timely manner

All the firms in this study demonstrated timely responses to demand. For example, Firm 9 (Wood products) changed the specifications of its wooden pallets to reduce strength and increase recyclability; this enabled them to shorten manufacturing lead times in response to customer requests. A response to demand for sustainability was also evident in Firm 15 (Basic chemical). The manager stated that the firm had implemented more responsible corporate practices in response to demands from the shareholders. These firms changed their products and processes promptly in response to requests from customers and stakeholders.

Response to demand in a timely manner involves firms coordinating with suppliers to adjust their operations. For instance, referring to their involvement in project-type manufacturing, the managers of Firm 23 (Prefabricated metal) and Firm 24 (Automotive) stated that they experience constant changes in customer requirements in relation to the

products they manufacture. They claimed to be able to meet these as they can obtain material supplies with the relevant modifications in good time.

Another approach of timely response to demand identified in this study involves keeping multiple resources in supply chains. For instance, Firm 7 (Beverages) has several production facilities and Firm 20 (Non-metallic minerals) has a number of warehouses in different locations closer to customer markets. Planned geographical distribution means faster deliveries to customers. Furthermore, it helps firms to respond to demand and supply fluctuations by rearranging resources among these facilities. In this way Firm 7 (Beverages) and Firm 20 (Non-metallic minerals) have designed their supply chains to quickly respond to customer requests.

Firms also respond to supply changes in a timely manner. For example, Firm 13 (Basic chemical) and Firm 30 (Machinery and equipment) have adjusted their sourcing strategies by analysing factors such as exchange rates that affect the timing of supply transactions. The firms are able to quickly reconfigure their supply chains in response to external factors such as these. As a result, these firms have avoided unnecessary costs and have improved profits.

The findings show that firms such as Firm 6 (Beverages), Firm 8 (Clothing and footwear), Firm 12 (Petroleum), Firm 14 (Basic chemical), Firm 21 (Non-metallic minerals), Firm 22 (Prefabricated metal), Firm 24 (Automotive) and Firm 29 (Machinery and equipment) have also responded to strategic opportunities and challenges in a timely manner. For instance, the sustainability report of Firm 12 (Petroleum) states that the firm has invested in new liquefied natural gas projects with the aim of responding to the growing energy demand from Asia.

The study reveals that firms respond quickly to changes in demand and supply as well as to strategic opportunities and challenges. Similarly, Carvalho, Duarte and Cruz-Machado (2011), Gligor, Holcomb and Stank (2013) and Li, Goldsby and Holsapple (2009) observed that firms in agile supply chains respond to operational and strategic changes in a timely manner. The current findings show that firms quickly reconfigure their resources and also receive suppliers' support for timely responses. Studies have also emphasised the value of

collaboration with suppliers to quickly adapt supply chain structures for a timely response (Baramichai, Zimmers Jr & Marangos 2007; Christopher 2000; Gligor & Holcomb 2012b). The present findings also demonstrate quick reconfiguration of supply chains in response to supply changes which enabled firms to meet customer requirements. As stated by Yusuf et al. (2014b) supply uncertainties prevent firms from meeting customer requirements. Timely response to supply fluctuations is, therefore, an important feature of supply chain agility.

In summary, another key attribute of supply chain agility identified in this study is the timely response to changes in demand and supply, along with the changes in strategic implications. Firms need to adjust operations and strategies quickly, following market changes, and with the support of suppliers they can reconfigure the supply chain appropriately. These findings also warrant the following measures for supply chain agility in the quantitative survey: reconfiguring supply chain resources quickly to respond to changes in demand; reconfiguring supply chain resources quickly to respond to changes in supply (see Table 4.3).

5.3.4 Embedding flexibility into operations

Process flexibility is evident in this study where firms described modifications to production schedules, inventories and material sources. For example, the manager in Firm 6 (Beverages) stated that the firm operates multiple shifts to meet the increased demand for cordial drinks during the summer, while it reduces production in winter when there is less demand. By changing production schedules and adjusting resources at the right time, the firm quickly responds to seasonal demand for various product amounts and mixes. The findings of this study also show process flexibility in responding to changes in supply. For example, when there is a delay in material supply, Firm 1 (Food processing) changes production schedules to keep its operations running. This enables the firm to reduce its costs and maintain productivity. This finding suggests that process flexibility helps firms to respond to changes in both demand and supply.

In addition, leveraging the flexibility of suppliers helps firms to maintain responsiveness. For instance, the managers of Firm 27 (Machinery and equipment) and Firm 29 (Machinery and equipment) said that their suppliers adjust production schedules and delivery times

according to the demand requests of the firms, helping firms to respond to their customer requirements promptly.

Strategic flexibility is evident where firms in this study report developing new products and restructuring operations. For instance, Firm 12 (Petroleum) diverted its petroleum refining and manufacturing activities towards premium petroleum, having realised the increasing demand for that product category. Firm 17 (Basic chemical) reduced the number of its production facilities from five to three in response to declining demand.

The findings above show that flexibility in processes is vital for firms to respond promptly to market changes. Chiang, Kocabasoglu-Hillmer and Suresh (2012) also observed that process flexibility enables firms to change their production plans and designs in response to changing demand. Flexibility of suppliers is also vital to maintain the process flexibility and to be responsive to demand changes. Similarly, Agarwal, Shankar and Tiwari (2007), Chiang, Kocabasoglu-Hillmer and Suresh (2012) and Yusuf et al. (2014b) demonstrate suppliers altering their operations to meet changing supply needs of buyer firms and support them to quickly respond to their customers. While the discussion on process flexibility to demand changes is dominant in literature (e.g., Braunscheidel & Suresh 2009; Kim, Suresh & Kocabasoglu-Hillmer 2013; Swafford, Ghosh & Murthy 2008), the findings of the current study also show process flexibility in responding to supply changes. Strategic flexibility allows firms to prepare their supply chains to respond to new market opportunities and challenges, confirming the assertion of Li et al. (2008) that strategic flexibility adjusts a firm's operation systems to respond to long-term market changes. The current findings, therefore, show that flexibility, reflected in processes and strategies, is an attribute of supply chain agility. This finding is consistent with other studies that have identified flexibility as an important feature in supply chain agility (e.g., Gligor, Holcomb & Stank 2013; Li et al. 2008).

In summary, this study reveals that flexibility is an important attribute of supply chain agility. Flexibility enables a timely response to market changes by providing the ability to adjust processes and strategies. While process flexibility facilitates timely response to short-term demand and supply changes, strategic flexibility enables a response to changes that have long-term impact. The findings justify items in the quantitative survey that

describe reconfiguration of supply chain resources in a flexible manner to respond to strategic opportunities/challenges and changes in demand and supply as a measure of supply chain agility (see Table 4.3).

Section 5.3 has presented evidence that agility is represented by the ability to identify short- and long-term market changes in both upstream and downstream, and respond to both operationally and strategically in a timely and flexible manner. Firms develop these capabilities by leveraging external resources, such as information and competencies of supply chain partners. Relational attributes, such as networking and communication with external stakeholders, facilitate the early detection of market changes. This enhances a firm's ability to predict them, to react to them and to articulate proactive solutions. Firms reconfigure processes quickly to respond to these changes. Flexibility in operations and strategies, and the flexibility of suppliers are vital in responding to changes. In this way firms can maximise the opportunities arising from both long-term and short-term changes. The themes and sub-themes associated with the attributes of supply chain agility are shown in Figure 5.1. The circle in the middle represents supply chain agility. The arrows moving out from the circle in the middle depict the themes of supply chain agility. The arrows moving out from these themes show the sub-themes.

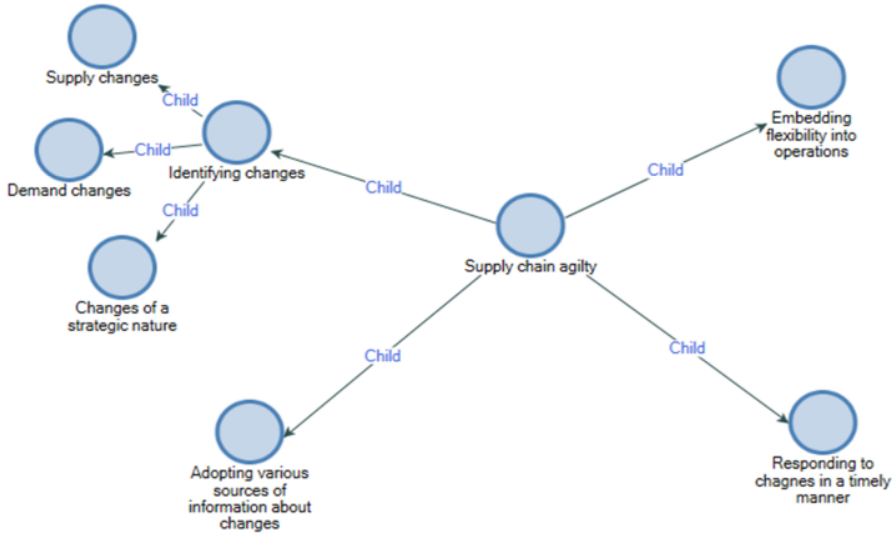

Figure 5.1 The themes for supply chain agility

5.4 Supply chain resilience

The findings relating to the attributes of supply chain resilience in Australian manufacturing firms were grouped into three themes: 1) Withstanding sudden changes, 2) Joint planning to overcome disruptions, and 3) Minimising disruptive events. The findings address research question 1: What are the attributes of supply chain agility and resilience in firms in the Australian manufacturing sector? These findings also validate the scale items used to measure supply chain resilience in the quantitative survey (see Table 4.3).

5.4.1 Withstanding sudden changes

All the firms in this study reported that they minimise disruptions to their operations caused by sudden changes. Twenty-eight firms continued operations during sudden changes by having contingency plans. For example, the manager in Firm 21 (Non-metallic minerals) stated that they have contingency plans with their supply channels which they put in place in order to continue serving their customers whenever there is a disruption to their supplies. Being aware of possible supply chain disruptions that can be caused by sudden changes helped these firms to prepare contingencies and respond to sudden changes by executing these plans. By executing contingency plans, these firms maintain control over their supply chains and prevent disruptions in their operations.

The contingency plans involve keeping buffer stocks, having multiple suppliers or maintaining multiple production facilities. These plans are about having alternative production capacities. The interviewees explained that when their firms encounter a sudden change, they respond quickly with alternative capacities to adapt to the situation. For example, Firm 18 (Polymer and rubber) once experienced delay in supplies for several weeks due to an issue at a particular supplier site. However, the firm continued operations with no disruptions because of their buffer stocks. This study shows that firms also keep buffers at supplier sites. For example, Firm 13 (Basic chemical), Firm 18 (Polymer and rubber), Firm 29 (Machinery and equipment) and Firm 31 (Machinery and equipment) all requested suppliers to keep additional inventories to minimise supply risk. Realising that some of their supplies are uncertain; these firms had requested those suppliers to keep additional inventory. This approach helps these firms to receive continuous supplies and thus minimise any disruption to production.

Firms such as Firm 4 (Food processing), Firm 5 (Food processing), Firm 12 (Petroleum), Firm 14 (Basic chemical), Firm 20 (Non-metallic minerals), Firm 25 (Automotive) and Firm 29 (Machinery and equipment) withstand sudden changes by means of multi-sourcing. When supplies are disrupted, these firms continue operations by switching to alternative suppliers to get material supplies with no delays. Firms which include Firm 3 (Food processing), Firm 5 (Food processing), Firm 7 (Beverages), Firm 20 (Non-metallic minerals), Firm 22 (Prefabricated metal) and Firm 24 (Automotive) all maintain multiple production facilities to minimise operational disruptions. The manager in Firm 20 (Non-metallic minerals) described how having multiple factories helped the firm to adapt to sudden changes by shifting production between facilities in times of uncertainty.

The study reveals that firms withstand sudden changes by minimising operational disruptions caused by sudden changes, confirming the findings of Carvalho, Duarte and Cruz-Machado (2011) and Melnyk et al. (2014). The findings show the use of contingency plans which involve maintaining additional capacities that help them to minimise damage to their operations during sudden changes. This is similar to the concept of redundancy cited by Carvalho, Azevedo and Cruz-Machado (2012) and Sheffi and Rice (2005). Those authors described capacities being kept in reserve to replace lost capacities in case of sudden changes. Even though keeping buffer stocks within the firm has been indicated in the literature as a means to minimise supply uncertainty (e.g., Blackhurst, Dunn & Craighead 2011; Carvalho, Azevedo & Cruz-Machado 2012; Christopher & Peck 2004; Sheffi & Rice 2005), the current study also refers to the keeping of buffer stocks with suppliers. This is vital to minimise operational disruptions if the supplier uncertainty is high. Christopher and Peck (2004) and Carvalho, Azevedo and Cruz-Machado (2012) described firms keeping multiple suppliers to recover from disruptions. However, the present findings show that firms were also able to prevent operational disruptions by means of multi-sourcing. This finding is in agreement with Blackhurst, Dunn and Craighead (2011) and Shao (2013) who stated that firms should be prepared with contingency plans to avoid operational failures caused by sudden changes.

In summary, an important attribute of supply chain resilience identified in this study is the ability to withstand sudden changes by minimising operational disruptions. To do that, they

prepare contingency plans in advance which revolve around having alternative capacities to execute in the event of sudden changes. Firms quickly respond to sudden changes by switching to these alternative capacities to maintain control of their operations and adapt to the situation. The findings warrant the use in the quantitative survey of the following items to measure supply chain resilience: maintain control over structure and function of the organisation during sudden changes; adapt to sudden changes in the supply chain easily (see Table 4.3).

5.4.2 Joint planning to overcome disruptions

When a firm experiences a disruption it seeks help from other firms to restore operations. For instance, Firm 27 (Machinery and equipment) jointly planned with their supplier how to handle materials when the firm experienced an unexpected customer-order cancellation after placing a supply order to manufacture that order. If the disruption is caused by a supply chain partner firm, firms work with those partners to overcome their problems. When Firm 18 (Polymer and rubber) had issues with supplies, the firm worked with the suppliers to help them rectify the problems. As a result, the firm could resume normal operations with minimal delays and also minimise possible future disruptions. The inter-firm relationships have helped these firms to leverage each other's competencies to swiftly overcome disruptions.

When a firm informs its supply chain partners about disruptions, the firm develops a better understanding of what has happened. For instance, Firm 18 (Polymer and rubber), Firm 22 (Prefabricated metal), Firm 24 (Automotive) and Firm 27 (Machinery and equipment) communicated about certain incidents at their workplaces that could disrupt operations in downstream firms and shared recovery plans to minimise disruptions to downstream operations. The manager in Firm 24 (Automotive) stated that such communication enabled the firm to continue business with other firms and helped to smooth customer relations during the firm's recovery period. This information helps downstream firms to prepare adequate responses to mitigate their operational failures.

The findings also provide evidence of co-opetition when the entire industry is disrupted from an incident, such as a natural disaster. The manager in Firm 22 (Prefabricated metal)

stated that their firm works with competitors to respond to and overcome sudden changes that affect the entire industry. This joint decision-making helps firms to share risk and prepare adequate responses to quickly overcome disruptions.

This study suggests that jointly working with other firms to respond to and recover from disruptions is an attribute of supply chain resilience. This finding is consistent with supply chain resilience studies which have emphasised that firms make decisions and work together in an event of a sudden change (Christopher & Peck 2004; Jüttner & Maklan 2011; Scholten & Schilder 2015). The findings show that such cooperative efforts are possible because of the relationships built with other firms. Christopher and Peck (2004) also stated that inter-firm relationships are important to quickly engage in such cooperative efforts in an event of a disruption. The study reveals that developing understanding about the incidents with supply chain partners assist firms to adjust their operations to minimise the impact of those disruptions. Similarly, other studies have identified the need for information sharing about incidents and recovery plans to improve readiness of other firms to respond to disruptions (e.g., Christopher & Peck 2004; Jüttner & Maklan 2011). The findings of the current study illustrate co-opetition to overcome disruptions. This is in contrast to Scholten and Schilder (2015) who observed that firms collaborate with other firms that are horizontally integrated to mitigate the effects of disruptions. This co-opetition is important to prevent the situation where some firms might act in an opportunistic manner, which could worsen the effects of such disruptions for other firms.

In summary, the findings of this study suggest that in the event of a disruption, firms work in a coordinated manner to restore their operations with supply chain partners and competitors. Inter-firm relationships facilitate these cooperative efforts. The understanding developed among supply chain partners about their disruption-affected capacities enables firms to plan operations with the resources still available to them and to decide on alternative resource options. In these ways, the partnership minimises the disruptions to other firms and reflects the supply chain approach in reducing damages. Accordingly, joint planning to overcome disruptions is an important attribute of supply chain resilience. The findings also provide the rationale for the use of the following items in the quantitative survey: collaborate with supply chain partner firms in responding to changes, adequately

respond to unexpected changes in the business environment, and quickly return to its original state after being disturbed by sudden changes (see Table 4.3).

5.4.3 Minimising disruptive events

Another attribute of supply chain resilience revealed in this study is to minimise the causes that could lead to supply chain disruptions in the future. For example, firms that are likely to see their manufacturing operation disrupted due to defective materials monitor the quality of their supplies to minimise unnecessary production setbacks. For example, the quality of materials is critical for manufacturing processes in Firm 13 (Basic chemical), Firm 18 (Polymer and rubber) and Firm 29 (Machinery and equipment). These firms have, therefore, introduced processes to monitor the quality of supplies and to verify the sources of materials. Firm 25 (Automotive) has realised that suppliers without geographically-distributed plants are a potential source of disruption. By learning from natural disasters which had previously affected their suppliers and causing production stoppage, the firm changed its sourcing strategy to select suppliers who have geographically-distributed plants. In this manner, the firm can minimise the risks of disrupted supplies from such incidents in future.

The study reveals that firms which minimise the causes of disruptions work with suppliers to ensure sustainability. For example, Firm 13 (Basic chemical), examined the history of labour relations of its suppliers during the supplier selection process. Firms with poor labour relations are prone to strikes which are likely to create material shortages in markets and potentially disrupt a firm's operations. Thus practices which add to a firm's resilience can affect social sustainability in the supply chain.

The findings show that when firms are alert to the causes of disruptive events, they take actions that are effective for achieving long-term social and environmental sustainability. For example, Firm 5 (Food processing) collaborated with farmers to implement livestock traceability systems, foreseeing the possibility that retailers and customers might demand such a system in future. The manager predicted that addressing such demand in future could be disruptive to their supplies. Firm 3 (Food processing) has introduced farming systems to prevent soil degradation, realising the potential of soil degradation to disrupt

supplies in future. These new practices ensure that the soil can be used long term for farming. These examples provide evidence of the firms' concern about disruptions to the supplies that can arise in the long term and highlight the firms' actions to proactively manage those issues.

This study demonstrates that firms identify causes that could lead to supply chain disruptions and take proactive actions to address these causes. These causes are related to firms' operations or sustainability issues. Minimising sustainability-related causes is relevant since 30 firms studied have complex supply chains with offshore supply chain partners that extend beyond tier 1. These often complex supply chains are susceptible to disruptions at those partner firms. This is particularly important since some suppliers are in developing nations where sustainability-related rules and regulations are not stringent. Similarly, Lee (2010), Reuter et al. (2010) and Sancha et al. (2015) highlighted unsustainable practices of supply chain partners as a potential cause of supply chain disruptions. The findings of the current study also show that firms have considered long-term sustainability-related issues as potential causes leading to disruptive events. This is in line with Fiksel, Goodman and Hecht (2014), who found that resilient firms consider the potential of long-term sustainability issues to disrupt their supply chains. These findings, therefore, suggest that minimising the causes leading to disruptions is an attribute of supply chain resilience.

In summary, the study reveals that firms minimise causes of disruptions to their supply chains in the short-term and long-term. They identify these potential threats by being aware of changes in the business environment and from their learning in past. Addressing these causes in advance assists firms to minimise disruptions to their supply chains. The findings also justify the following scale items in the quantitative study used to measure supply chain resilience: maintain situational awareness at all time of current and long-term changes; learn from unexpected events affecting the supply chain; take actions to minimise causes leading to unexpected changes (see Table 4.3).

Section 5.4 has presented evidence that the firms in this study prepare for uncertainties. The firms use redundant resources to prevent failures from short-term disruptions. Firms network with others and exchange resources while in the phases of responding to and

recovering from failures. They also reduce the likelihood of supply chain disruptions by identifying and eliminating potential threats. Supply chain resilience, therefore, proactively engages in preventing short-term and long-term disruptions, in addition to preparing to minimise the impacts of disruptions when they occur. These themes associated with supply chain resilience are illustrated in Figure 5.2.

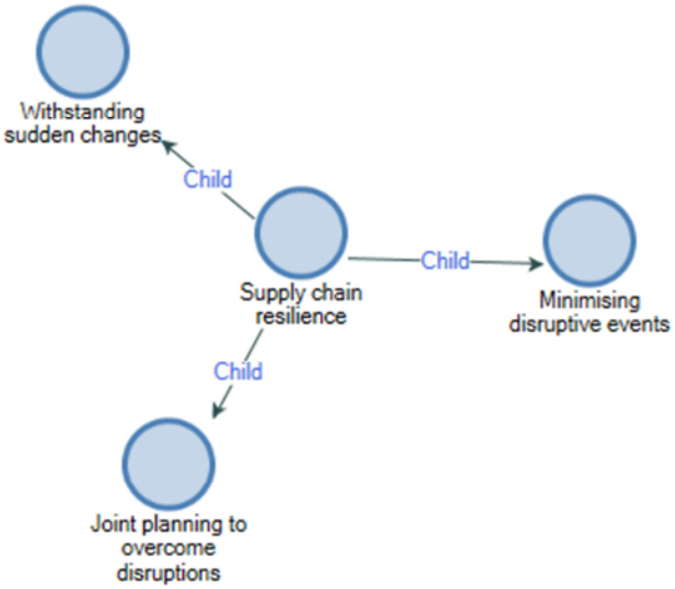

Figure 5.2 The themes of supply chain resilience

5.5 Social sustainability

Themes that relate to social sustainability practices include: 1) Ensuring employee welfare, 2) Engaging in ethical business conduct, 3) Assuring external welfare, and 4) Maintaining social sustainability in supply chains. These themes address research question 2: What sustainability practices are present in firms in the Australian manufacturing sector? Additionally, they verify the scales used to measure social sustainability in the quantitative survey (see Table 4.3).

5.5.1 Ensuring employee welfare

In regard to improving the welfare of their employees, the firms discussed activities that relate to health and safety, skills development, employee rights and social welfare.

5.5.1.1 Improving workplace health and safety

All of the interviewees, the sustainability reports and the information presented in the firms' websites specifically mentioned health and safety as an important aspect of social sustainability. The interviewees stated that occupational health and safety (OH&S) is given high priority in their organisations:

> Safety is the key item that we always focus on…Safety is the number one priority in the organisation and we always consider the OH&S aspects of all of the processes in making our vehicles. We always do an occupational health and safety assessment for every process involved in building automotive vehicles. (Firm 25, Automotive)

The interviewees in Firm 1 (Food processing) and Firm 17 (Basic chemical) stated that these activities assist firms to comply with regulatory requirements.

Firms ensure employee health and safety in many ways. For example, Firm 17 (Basic chemical) pays special attention to its employees' physical fitness when assigning roles to older employees. By doing that, the firm minimises employee health issues caused by the physical demands of the role. Firm 18 (Polymer and rubber) has installed air-conditioners and offers cold drinks and ice blocks to keep employees cool due to the relatively high temperatures involved in its manufacturing process. These activities improve working conditions and reduce workplace injuries.

This study reveals that all the firms engage in OH&S activities and it is a regulatory compliance. In Australia, it is compulsory to assure OH&S, according to the workplace health and safety legislation (Department of Industry, Innovation and Science 2016). The findings demonstrate that OH&S activities in the workplace enhance employee wellbeing, in keeping with the studies of Kortelainen (2008) and Porter and Kramer (2011) which found that these activities led to better working conditions. The findings, therefore, suggest that improving workplace health and safety is a social sustainability practice. This is in line with the literature, which underlines that managing OH&S is an important aspect of social

sustainability (Carter & Jennings 2004; Kortelainen 2008; Maloni & Brown 2006; Mani et al. 2016; Yawar & Seuring 2015).

5.5.1.2 Developing employee skills

All the firms interviewed conduct training and development activities to upgrade employee skills. For example, Firm 18 (Polymer and rubber) offers training programmes with the objectives of upgrading employees' skills and developing a multi-skilled workforce that can adapt to new technologies. This activity helps employees to perform at the level that the firm expects. Some training programmes aim to provide opportunities for the employees. For example, Firm 25 (Automotive) provides training programmes with the objective of skilling employees to obtain jobs elsewhere due to the forthcoming factory closure. This activity, therefore, reduces employee uncertainty.

Similarly, studies have identified the need for developing employee skills to meet the firm's objectives (Closs, Speier & Meacham 2011; Dos Santos, Svensson & Padin 2013). These studies describe the development of marketable skills as encouragement for employees to maintain focus on their current workplace activities and improve their future employment opportunities (Chadwick, Hunter & Walston 2004; Dos Santos, Svensson & Padin 2013). The findings show that skill development activities assist employees to develop their technical skills and employability while alleviating their uncertainties. These findings, therefore, demonstrate firms' engagement in employee welfare and suggest that skill development is a social sustainability practice. This is also in line with Closs, Speier and Meacham (2011) and Mani et al. (2016), who identified employee skill development as an important social sustainability practice.

5.5.1.3 Ensuring employee rights

The interviews, websites, annual reports and sustainability reports confirmed that the firms had clear policies regarding treating all employees equally — with no discrimination based on sex, ethnicity, race or physical impairment. For example, the codes of conduct of Firm 14 (Basic chemical) set out its anti-discrimination policy by which all employment-related decisions are taken with no bias for personal characteristics, experience, disability, gender, religion, ethnicity, nationality, age or marital status. The managers of Firm 8 (Clothing and footwear) and the sustainability report of Firm 15 (Basic chemical) mentioned the hiring of

people with indigenous backgrounds. These practices are relevant since Australia has a culturally diverse workforce which also includes indigenous people.

The fair and equal treatment of employees with special needs is also evident in the statement below:

> We have some people here with disabilities. As far as I am concerned, everyone should be treated with dignity regardless of their capabilities…And it's good to see those people. They feel like contributing, they like coming to work, so keeping them happy is the main thing. (Firm 18, Polymer and rubber)

The findings also illustrate fair labour practices, such as avoiding child or forced labour, low wages, extended work hours and allowing the right to form unions. For example, the sustainability report of Firm 4 (Food processing) stated that the firm does not employ child or forced labour in their facilities. The codes of conduct of Firm 13 (Basic chemical) and Firm 16 (Basic chemical) also stated that the firms preserve employees' rights to be respected, their privacy, fair remuneration and freedom of association. Also, these firms do not tolerate discrimination, harassment or under-payment of workers. These labour practices provide favourable working conditions for employees and thereby promote employee wellbeing.

Similarly, Klassen and Vereecke (2012) observed that addressing issues such as employee discrimination, low wages, extended working hours and contract labour contributes to employee welfare. Managing a workforce free of these issues represents socially sustainable conduct and suggests that ensuring employee rights is a social sustainability practice. This finding is in accord with the studies that stated assuring employee equity and labour rights are important aspects of social sustainability (e.g., Maloni & Brown 2006; Mani et al. 2016; Park-Poaps & Rees 2010; Yawar & Seuring 2015).

5.5.1.4 Enhancing employee social welfare

The study provides evidence of firms engaging in activities that promote employees' social welfare. For example, Firm 18 (Polymer and rubber) and Firm 24 (Automotive) organise social events to celebrate significant achievements or seasonal events. Firm 18 (Polymer and rubber) shows appreciation towards employees for their contribution to organisational achievements by organising social gatherings. Such activities increase employees' morale.

Firm 24 (Automotive) organises family days for its employees. The manager believes that this demonstrates the firm's appreciation of its staff. Also, these events develop employee satisfaction. However, these two firms were the only ones to include such social activities. The remaining firms were reluctant to engage in social events for workers, probably because of the costs involved and the uncertain link between such activities and improved workplace productivity.

Another social welfare-related activity is the assistance provided to employees when they face difficulties, such as a severe health issue suffered by employees or their family members. This also extends to helping employees who are affected by external events such as floods. The managers of Firm 10 (Pulp, paper and paperboard) and Firm 25 (Automotive) stated that they organise collections from employees to contribute financially to their colleagues facing difficulties. These kinds of social welfare activities also demonstrate that firms value their employees.

Even though the findings in this study suggest providing employee social welfare is a social sustainability practice, it currently remains under-examined. Valiente, Ayerbe and Figueras (2012) considered employee social welfare as a social sustainability practice; however, their study only considered activities such as providing pensions, family plans and medical and legal services. The findings in the current study suggests that activities such as employee socialisation and assisting employees to overcome their personal difficulties can also be regarded as social sustainability practices.

In summary, firms in this study aim to minimise any damage that could be caused by the work content or the work environment to the health of their employees. They also offer skills development programmes. These programmes help employees to accumulate new knowledge and develop skills in the areas where they might be lacking or which are important to the firms or the job market. These improvements occur at the individual level, offering opportunities for career advancement. Firms also treat employees according to legislated labour standards and assure their rights at work. These principles guide provision of pleasant working conditions, treating employees equally, protecting their privacy, avoiding workplace violence and paying employees a fair wage. The social welfare activities provide opportunities for socialisation and help employees to overcome

difficulties. All these activities promote employee wellbeing. These activities, therefore, reflect social sustainability practices and justify the following items to measure social sustainability in the quantitative survey: take actions to improve occupational health and safety of employees; take actions to develop employee skills and ensure the rights of employees (see Table 4.3).

5.5.2 Engaging in ethical business conduct

Many of the (25) firms' websites, sustainability reports and annual reports, and the interviewees of remaining firms stated that they practise ethical business conduct. The key focus areas in ethical business conduct are bribery and corruption, insider trading, conflict of interest and the confidentiality of information. For example, the sustainability reports of Firm 15 (Basic chemical), Firm 19 (Polymer and rubber), Firm 24 (Automotive) and Firm 30 (Machinery and equipment) specify that employees should adhere to anti-bribery laws and avoid improper payments. These policies also advocate fair treatment of the firms they trade with, notwithstanding healthy competition. Additionally, the sustainability reports of Firm 13 (Basic chemical), Firm 14 (Basic chemical) and Firm 24 (Automotive) include policies about insider trading. Conflict of personal interest is also highlighted in the sustainability reports of Firm 4 (Food processing) and Firm 7 (Beverages). They include conditions such as stating that every employee action should be supportive of the firm, and that employees should not take advantage of external dealings while being employed by the firm. According to the codes of conduct of Firm 4 (Food processing), Firm 13 (Basic chemical), Firm 14 (Basic chemical), Firm 24 (Automotive) and Firm 27 (Machinery and equipment), employees should not divulge confidential information, such as financial data, strategic plans, bidding information or the details of customers or suppliers to other parties. These rules prohibit employees from exploiting the resources of their employers.

The activities revealed in this study relate to standards and behaviours that firms expect of their employees in organisational actions and trade with others. These are similar to ethical principles identified by Mani et al. (2016), such as not allowing employees to engage in unethical practices (e.g., bribery or insider trading). However, the activities identified in the current study are different from the ethical conduct as defined by Closs, Speier and Meacham (2011). According to those authors, ethical business conduct includes activities

such as employee relations (working conditions, fair labour and wages), community involvement (engagement in community activities) and business management practices (product safety, responsible marketing, product traceability). Even though the firms in the current study engaged with these aspects, they were treated separately from ethical business conduct. Similar to Closs, Speier and Meacham (2011) and Mani et al. (2016) who have shown that ethical business conduct is a part of social sustainability, this study also regards engaging in ethical business conduct as a social sustainability practice.

In summary, ethical business conduct involves employees acting responsibly in their activities within the firm and with other firms. They act honestly with integrity and avoid conflicts between personal interests and business interests. This finding also supports the measure of the following item in the quantitative survey: practising ethical business conducts in business transactions to measure social sustainability (see Table 4.3).

5.5.3 Assuring external welfare

The findings in this study indicate that firms consider the wellbeing of their supply chain partners and also in the communities that are directly affected by their operations. Firms assure the wellbeing of their supply chain partners by paying competitive prices to suppliers. For example, in some instances, the managers stated that they purchase items at a reasonable price which is competitive, fair and also based on prevailing market prices. These include Firm 2 (Food processing), Firm 3 (Food processing), Firm 5 (Food processing), Firm 8 (Clothing and footwear), Firm 16 (Basic chemical), Firm 17 (Basic chemical), Firm 26 (Automotive), Firm 30 (Machinery and equipment) and Firm 31 (Machinery and equipment). They hold the view that paying market prices will satisfy the suppliers and, therefore, they do not exploit suppliers.

One type of community-oriented initiatives is philanthropic activities. For example, Firm 3 (Food processing) was involved in a community project of building a cricket ground for a community club. Firm 30 (Machinery and equipment) is involved in Acquired Immune Deficiency Syndrome (AIDS) projects. Firm 2 (Food processing) provides internship training for students at universities and vocational institutions. All these philanthropic

activities, although external to the firm's main business operations, aim to provide benefits to wider society.

Another type of external welfare activity of firms is providing employment opportunities for people in the local community. For instance, the sustainability reports of Firm 12 (Petroleum) and Firm16 (Basic chemical) emphasised the employment of people in the vicinity of their factories and also purchasing from local suppliers. With this approach, the firms increase the employment rates of the communities in which they operate.

Firms in the basic chemical industry need to assure the safety of manufacturing processes to the public. For example, the manager of Firm 17 (Basic chemical) stated that the firm sets controls on noise levels and emissions so as to provide a safe environment for nearby residents. These activities also minimise the risk of protest from the general public and help the firms maintain their social licence to operate. Ensuring the safety of local community is vital for these firms as they are involved in hazardous operations.

The findings above show that firms consider the welfare of their suppliers and the communities. Interviewees stated their belief that purchasing at competitive prices is a way of assuring the welfare of the suppliers. Purchasing at competitive prices as a supplier welfare remains under-examined in literature. The present findings reveal firms' participation in donations and activities such as training, education, healthcare and housing as philanthropic activities. Other studies also discussed similar philantropic activities (e.g., Hutchins & Sutherland 2008; Mani et al. 2016; Mishra & Suar 2010). Studies such as that of Carter and Jennings (2004), Maloni and Brown (2006), and Mishra and Suar (2010) stated that philanthropic activity is a social sustainability practice. The findings also demonstrate that providing employment opportunities for locals could ensure the welfare of their communities. Similarly, Mani et al. (2016) also observed that hiring locals is a social sustainability practice. Furthermore, the study reveals that ensuring process safety provides community welfare. This is in agreement with Klassen and Vereecke (2012), who stated that addressing process-related activities which affect human safety, welfare and the community also benefit human welfare. Ensuring manufacturing process safety, therefore, reflects a social sustainability practice that provides wellbeing to communities located around the plant.

In summary, the findings show that firms engage in activities that offer welfare to external parties. These activities include responsible sourcing, philanthropic activities, providing employment opportunities and ensuring public safety. While sourcing decisions facilitate the wellbeing of suppliers, other activities contribute to the wellbeing of the wider community. In particular, philanthropic activities, employment and public safety aim at addressing societal problems such as healthcare, employment and education. Similarly, Bansal (2005) and Dyllick and Hockerts (2002) have mentioned that addressing these concerns is part of operating a responsible business. Therefore, assuring external welfare activities represents a socially sustainable practice. The findings support the following items in the quantitative survey: supporting welfare and betterment of suppliers; supporting the welfare and betterment of the wider community as measures of social sustainability (see Table 4.3).

5.5.4 Maintaining social sustainability in supply chains

The study provides evidence of firms monitoring and initiating social sustainability in the supply chain. These activities include careful consideration prior to selecting their supply chain partners, followed by regular monitoring.

5.5.4.1 Embedding social sustainability as a selection criterion

Twenty-four firms in the sample considered the social sustainability of their suppliers by setting social sustainability criteria for suppliers. For example, the sustainability report of Firm 16 (Basic chemical) mentioned codes of conduct for its suppliers and other third parties relating to ethics, human rights, sourcing and intellectual property. The attention to suppliers' sourcing decisions reflects social sustainability consideration extending beyond tier 1 upstream. This is important for firms whose materials could originate from countries known for poor labour practices. Firms such as Firm 14 (Basic chemical), Firm 15 (Basic chemical), Firm 16 (Basic chemical), Firm 27 (Machinery and equipment) and Firm 30 (Machinery and equipment) demonstrate their concerns about the extended supply chain by referring to a conflict mineral policy; these firms source minerals and metals that can originate from regions that do not comply with sustainability measures.

Firm 7 (Beverages), Firm 19 (Polymer and rubber) and Firm 20 (Non-metallic minerals) seek the assistance of Supplier Ethical Data Exchange (SEDEX), a third-party auditing

organisation that provides information about the ethical and responsible business practices of firms. These initiatives assist the firms to select socially responsible suppliers.

However, not all firms consider issues of social sustainability in the upstream supply chain, particularly if their suppliers are large reputable firms. They assume that the large firms are already socially sustainable:

> We are working with European suppliers, with the modern countries and working with Japanese. And to my knowledge, we are not doing anything to operate against human rights. Steel mills — these are the [main] suppliers. There are only a few big ones [steel suppliers] which are the same as ones who supply to car industries around the world. So, I wouldn't consider that the suppliers to Nissan, Toyota operate against any types of global regulations about human rights. (Firm 22, Prefabricated metal)

The nature of the supplier industries is also influential in considering the social sustainability of suppliers. The managers of Firm 10 (Pulp, paper and paperboard) and Firm 17 (Basic chemical) assume that employee-related considerations have no relevance in technology-intensive industries. Therefore, they do not make social sustainability a criterion for supply tenders from these suppliers.

The findings also show evidence of firms assessing customers for social sustainability. The managers in Firm 25 (Automotive) and Firm 29 (Machinery and equipment) expressed concern about their customers' social sustainability. The manager of Firm 25 (Automotive) stated that:

> If there was a customer, for example, who is in the Middle East that was involved in terrorism or something of that nature, of course we wouldn't sell our products to that type of customer. So I guess from another aspect we would take that into account. But that sort of thing is a very rare occurrence. (Firm 25, Automotive)

The findings illustrate the selection of socially sustainable supply chain partners. This finding is in agreement with the literature where it shows firms assessing suppliers' social sustainability to maintain a socially sustainable supply chain (Andersen & Skjoett-Larsen 2009; Ehrgott et al. 2011; Sancha, Gimenez & Sierra 2016). When buyer firms set social sustainability practices as requirements for suppliers, they should demonstrate their engagement in these practices in order to win contracts with buyers. Consequently, setting social sustainability criteria also leads to improvements in the social performance of suppliers (Andersen & Skjoett-Larsen 2009; Ehrgott et al. 2011; Sancha, Gimenez & Sierra

2016). The study also reveals firms setting social sustainability criteria for customers. This is an interesting finding since social sustainability of customers has been given less attention in previous studies that have focused on the social sustainability of suppliers (e.g., Andersen & Skjoett-Larsen 2009; Ehrgott et al. 2011; Leire & Mont 2010; Sancha, Gimenez & Sierra 2016). The reason why these two firms consider social sustainability of customers is linked to the nature of their markets. As customers for their products can come from areas involved in war and terrorism, and so these firms must seek to prevent certain products reaching those who may pose a threat to society. Klassen and Vereecke (2012) stated that firms might on-site monitor customers for product misuse, particularly with products that may be hazardous to health. Their study, however, focused on assessing customers after purchase, whereas the findings in this study suggest that social sustainability can be a criterion in making ethical sales decisions.

5.5.4.2 Visiting suppliers' sites

As part of monitoring and assessment of suppliers for social sustainability, Firm 17 (Basic chemical), Firm 18 (Polymer and rubber), Firm 23 (Prefabricated metal) and Firm 29 (Machinery and equipment) visit their suppliers' sites. These visits provide the opportunity to examine the actual work conditions and the type of social sustainability practices in use. For example, the manager in Firm 23 (Prefabricated metal) often visits the firm's suppliers in China to assess safety and ethical practices in the factories. He cited one instance when he requested the supplier firm to provide protective equipment for its workers. These visits, therefore, can positively influence suppliers' social sustainability.

However, the managers in three firms, Firm 13 (Basic chemical), Firm 23 (Prefabricated metal) and Firm 29 (Machinery and equipment), were critical of the benefits of supplier visits. For instance, the manager in Firm 29 (Machinery and equipment) pointed out that suppliers will tend to conceal unacceptable practices during those visits. He went on to stress that it is impossible to obtain an accurate picture of overseas suppliers' social responsibility due to cultural and political factors. He also stated that business practices that are unacceptable to the firm in Australia may be acceptable in overseas suppliers' operations according to the rules and regulations of their governments. For these reasons,

these managers felt that supplier visits cannot guarantee social sustainability at the suppliers' end, which for the firms in question were all offshore suppliers.

This study shows that supplier visits help firms to assess their suppliers' social sustainability practices, confirming the findings of Ciliberti, Pontrandolfo and Scozzi (2008), Leire and Mont (2010) and Sancha, Gimenez and Sierra (2016). In line with the latter study, the present findings also suggest that such visits improve suppliers' social performance. The study, therefore, confirms previous findings that visiting supplier workplaces is a practice that supports a socially sustainable supply chain (Hoejmose, Grosvold & Millington 2013; Sancha, Gimenez & Sierra 2016).

The findings also reveal drawbacks with supplier visits, and other studies have also criticised their effectiveness. Awaysheh and Klassen (2010) and Leire and Mont (2010) raised financial and culturally-specific issues relating to supplier visits, particularly those connected to offshore suppliers. Huq, Chowdhury and Klassen (2016) noticed that during visits, the supplier would window dress and claim untruthfully that they had implemented certain beneficial social practices. The perceived ineffectiveness of the visits probably explains why the practice of visiting suppliers was less appealing to certain firms.

In summary, firms in the sample assessed suppliers for social sustainability. However, it was felt that supplier assessment is not necessary if the suppliers are larger, reputable firms or ones that have less labour involvement in their operations. As explained above, firms assess their customers for social sustainability only if their products have a high possibility to be misused to put human life in danger. These assessments help firms to select socially sustainable supply chain partners and to improve their social performance. However, visiting suppliers' sites to monitor their social sustainability is thought to be less effective by some firms, particularly for offshore suppliers. The findings suggest that assessing supply chain partners facilitates a socially sustainable supply chain. The findings also support the inclusion of the items in the quantitative survey that represent consideration of suppliers' and customers' social sustainability to measure social sustainability (see Table 4.3).

Section 5.5 has presented evidence that the socially sustainable activities of Australian manufacturing firms revolve around employees, suppliers and the community. Employee health and safety is a major concern for firms, as it is a legal requirement. Another focus of social sustainability is the provision of employee skills development programmes. The interviews and the sustainability reports provided by the firms indicate that there are no discriminatory practices in the workplace or during recruitment. The practice of ethical business conduct reflects that firms are good corporate citizens who ensure the fair treatment of all parties involved in business transactions. Similarly, philanthropic activities represent their consideration for communities. Firms also contribute to the community by supporting local employment and ensuring public safety of their operations. The interviews and sustainability reports highlight that the firms place more emphasis on the social sustainability of upstream suppliers compared to their customers downstream. The supplier-side activities involve setting standards for supplier selection which, in turn, provide guidelines for suppliers. Even though setting standards has been the norm in the industry, physically monitoring supplier activities has been challenging. These themes for social sustainability practices are illustrated in Figure 5.3.

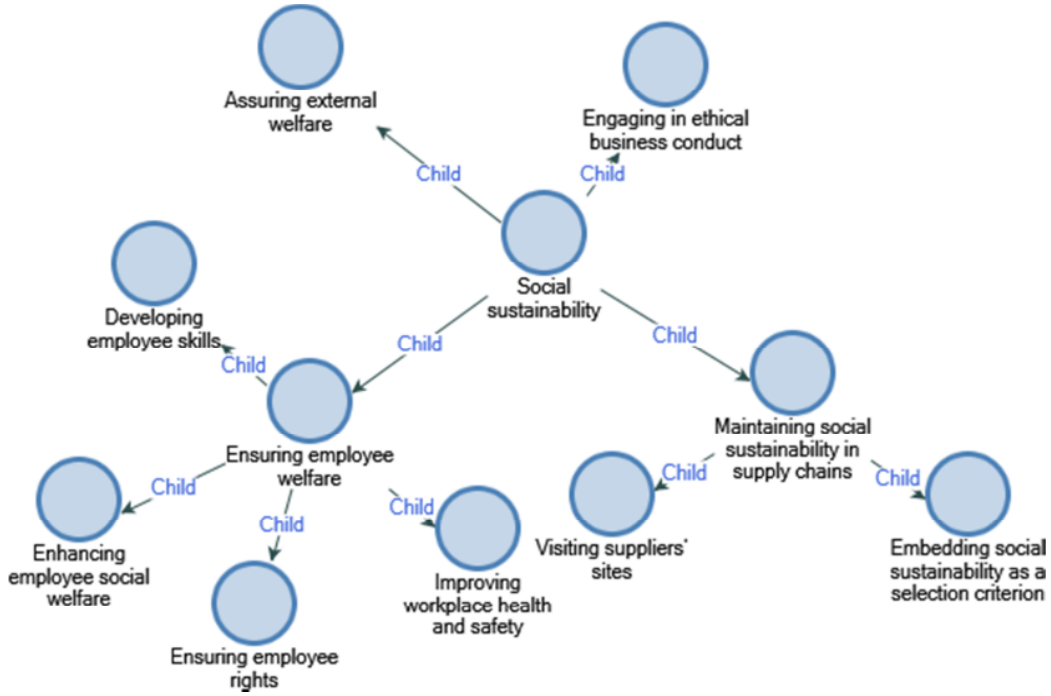

Figure 5.3 The themes for social sustainability

5.6 Environmental sustainability

The environmental sustainability practices of the firms were grouped into the following themes: 1) Developing environmentally friendly products, 2) Preserving natural resources, 3) Adopting environmental managements systems, and 4) Maintaining environmental sustainability along the supply chain. These themes address research question 2: What sustainability practices are present in firms in the Australian manufacturing sector? Additionally, they verified the scales used to measure environmental sustainability in the quantitative survey.

5.6.1 Developing environmentally friendly products

The findings of this study suggest firms develop environmentally friendly products by sourcing environmentally friendly materials and designing environmentally friendly products.

5.6.1.1 Environmentally friendly sourcing

Fourteen firms in this study source recyclable input materials. For example, Firm 22 (Prefabricated metal) purchases recyclable materials to reduce landfills. Firm 20 (Non-metallic minerals) purchases recyclable materials for product manufacturing to reduce environmental damages at the end of product life. Use of recyclable inputs, therefore, helps firms to minimise environmental impact. These 14 firms have purchasing policies that support environmental principles.

However, this study also reveals that product safety-related issues can prevent firms from sourcing recycled items. The manager in Firm 23 (Prefabricated metal) commented that recycled items originating from certain countries may contain harmful substances. Consequently, the firm does not risk using recycled materials in their manufacturing process.

Energy consumption is another consideration in environmentally friendly sourcing. Managers in Firm 20 (Non-metallic minerals) and Firm 30 (Machinery and equipment), mentioned that energy-efficient transportation can help to reduce emissions and save fossil fuels:

> We certainly wouldn't use companies that use old vehicles that consume a lot of petrol or diesel. We try to go for companies that invest in newer vehicles or equipment that are a lot more efficient on fuel and pollution. (Firm 20, Non-metallic minerals)

Energy-efficient transport services are important for these firms due to massive weights of their products which require large amounts of energy for transportation.

The study further showed that firms recognise the environmental processes and practices at supplier sites. For Firm 7 (Beverages) and Firm 25 (Automotive), it is a key requirement for their suppliers to be accredited with the ISO 14001 Environmental Management Systems standard. The sustainability report of Firm 4 (Food processing) stated that the firm purchases palm oil only from suppliers who are certified by the Roundtable on Sustainable Palm Oil. These examples show the concern of the firms in sourcing from suppliers who can assure environmentally responsible activities upstream. The findings also show that firms work with suppliers to reduce environmental impacts of the supplies. For example, the manager in Firm 21 (Non-metallic minerals) stated that the firm has requested their suppliers to reduce packaging materials and avoid printing on packaging to reduce energy consumption. Purchasing environmentally friendly materials, therefore, disseminates environmental sustainability along the supply chain.

The findings suggest that recyclability, energy-efficient transportation and environmental friendliness of supplier processes are important consideration in sourcing decisions. These findings are consistent with literature. The studies have shown that firms that practise environmentally friendly sourcing purchase recyclable materials (Eltayeb, Zailani & Ramayah 2011; Hsu et al. 2013), use energy-efficient transportation (Holt & Ghobadian 2009; Rao & Holt 2005), and consider the environmental performance of supplier operations while assisting and advising suppliers to improve their environmental performance (Hsu et al. 2013; Rao & Holt 2005). The study also reveals that purchasing recyclable materials may be constrained by the safety-related matters involved with such items.

5.6.1.2 Designing environmentally friendly products

A consistent theme in the findings is designing products to reduce negative environmental effects during manufacturing operations. According to its publicly available documents,

Firm 6 (Beverages) has improved the designs of bottles and cans to support lightweighting. Consequently, the firm has achieved higher efficiency in transportation, storage and shelf space in supermarkets. This shows that environmentally friendly designs support operational and environmental performance for both focal firm and downstream firms.

Firm 18 (Polymer and rubber), Firm 19 (Polymer and rubber), Firm 21 (Non-metallic minerals), Firm 24 (Automotive), Firm 28 (Machinery and equipment) and Firm 31 (Machinery and equipment) have designed products with improved environmental performance during their life span. Since the products of these firms contain hazardous materials, they have introduced new designs to improve recyclability of the products at the end of the product life. For instance, Firm 18 (Polymer and rubber) designs plastic products that can avoid the contamination of recyclable materials by non-recyclable materials. These new designs minimise environmental impacts during purchasing, manufacturing and disposal (Ashby, Leat & Hudson-Smith 2012; Eltayeb, Zailani & Ramayah 2011; Shi et al. 2012).

This study reveals that firms design products that consume less resources. This finding is consistent with the literature, where Carbone, Moatti and Wood (2012) and Eltayeb, Zailani and Ramayah (2011) emphasised the goal of reducing materials required for production when designing environmentally friendly products. The reduction in input materials leads to less waste, less material extraction and less energy consumption during manufacturing operations. Designing products with improved recyclability at the end of life reflects cradle-to-cradle approach (Braungart, McDonough & Bollinger 2007).

In summary, firms purchase recyclable materials and use energy-efficient transportation to maintain the environmental friendliness of the products manufactured. While recyclable materials reduce environmental impacts of the product at the end of its lifetime, energy-efficient transportation reduces energy consumption and emissions. Firms assess suppliers to ensure that supplies have been processed in an environmentally friendly manner. Firms also design products that require less material and perform more sustainably throughout the life cycle. These practices, therefore, require cooperative efforts with suppliers. Both sourcing and designing practices help firms to offer environmentally friendly solutions to customers. Similarly, studies have shown that designing environmentally friendly products

and green purchasing are important practices for environmental sustainability (Ateş et al. 2012; Colicchia, Melacini & Perotti 2011; Eltayeb, Zailani & Ramayah 2011; Holt & Ghobadian 2009). The findings further justify the following items in the quantitative survey: design environmentally friendly business solutions; cooperate with suppliers in environmental activities to measure environmental sustainability (see Table 4.3).

5.6.2 Preserving natural resources

The interviews and sustainability reports reveal the firms' endeavours to protect the environment by reducing their emissions and waste, increasing energy efficiency, reducing water use, and reusing their products.

Reducing emissions and waste is a main concern for almost all the firms interviewed. All the firms studied except for one (Firm 9 which processed wood products) engaged in the reduction of greenhouse gas emissions caused by their manufacturing operations. For example, as specified in its sustainability report, Firm 22 (Prefabricated metal) has set targets to reduce its levels of carbon dioxide and nitrogen oxide emissions.

These firms also engage in waste reduction activities. Firms design their operational procedures to reuse or treat waste before releasing it in order to minimise environmental damage. For instance, Firm 20 (Non-metallic minerals), reduces waste by optimising and standardising changeover procedures. Firm 15 (Basic chemical) recycles its solid waste to reduce landfill and reuses its liquid waste as a fertiliser or woodchip additive. These actions help firms to minimise extraction from the landscape and reduce costs as well as causing less damage to natural systems. One of the reasons given by the managers for engaging in these practices is to meet Environment Protection Authority (EPA) requirements.

The findings also show that emission and waste reduction controls are linked with a firm's health and safety agenda. The managers in Firm 5 (Food processing), Firm 17 (Basic chemical), Firm 18 (Polymer and rubber) and Firm 25 (Automotive) mentioned that these activities help their firms to improve the safety of their operations for employees and the community. Firms preserve quality of air, water and land by reducing emission and waste, thus providing a safer environment for employees and for the community.

Another approach to preserving the environment is using energy and water efficiently by improving processes and reusing these resources. According to its sustainability report, Firm 7 (Beverages) has installed a new ammonia chiller, LED lighting and brine lines in some of the production areas, saving approximately 191,000 kWh of electricity per year. Furthermore, the firm has initiated an energy management project to assess the use of renewable energy. Firm 2 (Food processing) uses water multiple times before discharging it as waste. These activities illustrate firms' practice of environmental sustainability.

The study also provides evidence of resource reusing. These include Firm 6 (Beverages), Firm 11 (Printing), Firm 15 (Basic chemical), Firm 17 (Basic chemical), Firm 20 (Non-metallic minerals), Firm 24 (Automotive), Firm 30 (Machinery and equipment) and Firm 31 (Machinery and equipment). Among these firms, only Firm 24 (Automotive) collects its products (trains and trams) at the end of their useful life and overhauls them to reuse some parts. The other firms that practise resource reuse have demonstrated it for packaging or logistic-related materials. For example, the manager in Firm 6 (Beverages) stated that the firm sends one container full of empty pallets back to the suppliers for every ten containers received with glass bottles. Firm 11 (Printing) uses the same packaging materials received from the suppliers to pack their manufactured products for sending to customers. Reuse of packaging or logistic-related materials allows the same resources to be used at different points in the supply chain. As a result, consumption of new resources is reduced.

The finding of this study is consistent with the literature, where studies have also reported emission reduction (e.g., Abbasi & Nilsson 2012; Ateş et al. 2012; Hsu et al. 2013) and waste reduction as environmental sustainability practices (e.g., Ateş et al. 2012; Rao & Holt 2005). Manufacturing operations inevitably produce waste such as scraps, by-products, water and hazardous materials. Disposal of these can lead to massive landfills, damage to water systems and natural habitats. Managing waste is, therefore, a major concern for the firms in this study. The findings show that a reason for firms engaging in environmental activities is the need for regulatory compliance. Throughout the literature, regulatory compliance is shown to be a main driver for firms to engage in environmental protection practices (Diabat & Govindan 2011; Lo 2014; Zhu, Sarkis & Lai 2013). The findings also

suggest that emission and waste reduction measures improve the safety of operations. Govindan et al. (2014) also noticed that when firms reduce the amount and toxicity of emissions and waste they can provide a better working environment for employees and their public image improves. The study illustrates that many firms use energy and water resources efficiently. Similarly, Pullman, Maloni and Carter (2009) found that effective utilisation of energy and water is important for environmental health. Colicchia, Melacini and Perotti (2011) observed that reduction in consumption of resources also minimises waste and emissions and consequently preserves the environment. The study also shows that firms mainly reuse packaging materials. Similarly, Holt and Ghobadian (2009) observed that one of the environmental sustainability practices of the firms they studied is sending back packaging materials and pallets received from suppliers. However, compared to the higher percentage of firms involved in such activities in their study, only seven firms in this study demonstrated the reuse of packaging or logistics-related items. The reasons for other firms not engaging in this practice relates to practical limitations, such as the cost involved in sending these materials back to offshore suppliers, mismatching of packaging materials received with the packaging requirements of firm's products, or hygienic reasons.

In summary, firms in this study reduce emission and waste to minimise environmental damage. They improve processes to efficiently use energy and water and also encourage reuse of packaging materials, pallets and reusing of some products. Reuse also requires cooperative efforts with customers to receive products back into the supply chain. All these activities reduce material consumption and waste and thereby represent environmentally sustainable practices. These findings support the following items used to measure environmental sustainability in the quantitative survey: efforts in reducing pollution, waste and hazardous materials; recycling; cooperation with customers (see Table 4.3).

5.6.3 Adopting environmental management systems

Sustainability reports and interview statements highlight the presence of environmental management systems, (through ISO 14001 certifications) in the firms studied. These were evident in Firm 4 (Food processing), Firm 6 (Beverages), Firm 12 (Petroleum), Firm 13 (Basic chemical), Firm 15 (Basic chemical), Firm 17 (Basic chemical), Firm 19 (Polymer and rubber), Firm 20 (Non-metallic minerals), Firm 21 (Non-metallic minerals), Firm 22

(Prefabricated metal), Firm 23 (Prefabricated metal), Firm 24 (Automotive), Firm 25 (Automotive), Firm 26 (Automotive), Firm 29 (Machinery and equipment), Firm 30 (Machinery and equipment) and Firm 31 (Machinery and equipment).

Firms also comply with industry-specific standards; for example, Firm 3 (Food processing) complies with the Bonsucro standard (which substantially covers the environmental aspects of sugar) to organise its environmental practices. Incorporating such standards indicates the presence of a planned and well-managed approach to environmental activities within the firms.

The presence of environmental management systems reflects that firms have adopted a systematic approach to manage their environmental practices. Similarly, Khanna and Anton (2002) found that firms with environmental management systems integrate environmental aspects with managerial decision-making. González, Sarkis and Adenso-Díaz (2008) observed that firms with environmental management systems introduce more environmental practices than firms without such systems. The presence of an environmental management system thus indicates environmentally sustainable practice. These findings support the following item in the quantitative survey: implements environmental management systems to measure environmental sustainability (see Table 4.3).

5.6.4 Maintaining environmental sustainability in the supply chain

This study has provided evidence of selecting environmentally friendly suppliers to maintain environmental sustainability in the supply chain. Seventeen of the firms interviewed maintain the environmental sustainability of their supply chains through careful supplier selection and regular audits of supplier sites. For example, according to its sustainability report, Firm 4 (Food processing) selects suppliers that manage the earth's resources sustainably. Supplies to these 17 firms include resources directly extracted from nature, such as metals, minerals and fisheries. These firms, therefore, need to ensure that their suppliers act in a manner that will preserve such resources sustainably.

The managers interviewed in Firm 18 (Polymer and rubber), Firm 23 (Prefabricated metal), Firm 27 (Machinery and equipment) and Firm 28 (Machinery and equipment) stated that

they do not consider the environmental sustainability of their suppliers. One reason given for this is that the firms have to be more frugal given the current economic climate and focus on cost-effectiveness. According to the manager in Firm 6 (Beverages), preference is given to those suppliers who can meet both price and sustainability criteria. Otherwise, cost is the key driver for supplier selection. Managers in Firm 19 (Polymer and rubber) and Firm 22 (Prefabricated metal) stated that they pay less attention to environmental sustainability credentials if the suppliers are market leaders in their industries. They assume that as market leaders these supplier firms maintain acceptable levels of environmental performance. These arguments can explain why selecting environmentally sustainable suppliers was not considered as important to the remaining firms in the sample.

The managers rarely mentioned selecting downstream partners of the supply chain in relation to environmental sustainability. The evidence is only apparent when selecting transport providers. For example, Firm 15 (Basic chemical) and Firm 30 (Non-metallic minerals) select transport providers that use vehicles with the latest technology as they consume less energy and have less impact on the environment. Being manufacturers of heavy industrial products that consume more energy during transportation, these firms can minimise environmental impacts by selecting environmentally friendly transport providers.

Firms pay less attention to the environmental sustainability of their customer firms. For instance, the manager in Firm 3 (Food processing) stated that they sell products to whoever wants to buy from the firm. This evidence indicates that selecting customer firms is a profit-based decision and that environmental sustainability is not a concern. However, an exception was the manager from Firm 25 (Automotive), who stated that his firm considered environmental matters when selecting automotive dealers as the firm's immediate customers. This firm connects to customers and community through dealers. As a result, assessing the environmental practices of dealers is a way for the firm to demonstrate their environmental commitment to the public.

The findings show that an approach to maintain an environmentally sustainable supply chain is selecting environmentally friendly partners to both upstream and downstream operations. Selecting environmentally sustainable suppliers is in agreement with studies that have emphasised the importance of such suppliers to maintain an environmentally

sustainable supply chain (González-Benito & González-Benito 2005; Green Jr et al. 2012a; Lo 2014). The findings also show that setting such criteria for supplier selection is dependent on the nature of suppliers and cost of the items. Selecting environmentally friendly downstream firms is less popular compared to selecting upstream firms and is limited to the selection of transport providers. This finding concurs with the study of Holt and Ghobadian (2009) which showed that only a few firms in their study had considered the environmental impacts of transport decisions and overall paid less attention to environmental sustainability downstream. The findings also reveal that selecting customers is solely a profit-oriented decision. This is supported by Colicchia, Melacini and Perotti (2011) and Holt and Ghobadian (2009) who observed that focal firms receive no direct cost savings from the environmental sustainability of downstream operations. However, the environmental sustainability of customers can reflect on the corporate image of a firm. Lo (2014) found that firms that are directly connected to customers select environmentally sustainable suppliers to promote their image. The findings of the current study extend this view, showing that firms that care about their image also select environmentally sustainable customer firms to partner with.

In summary, selecting environmentally sustainable suppliers depends largely on the nature of the goods supplied. Selecting environmentally sustainable customers may not be a main concern, yet it is considered when the firm seeks to improve its corporate image. The findings suggest that selecting environmentally sustainable supply chain partners reflects a firm's environmental sustainability all along the supply chain. The findings support items in the quantitative survey that refer to selecting customers and suppliers based on environmental criteria as a measure of environmental sustainability (see Table 4.3).

Section 5.6 has shown that firms minimise their consumption of resources internally. Lower resource consumption means less material extraction and higher productivity. Initiatives such as emission and waste reduction and resource reuse such as packaging materials are established to reduce environmental damage. Recycling is also evident as an environmental sustainability practice. Firms assess materials used in their manufacturing processes for recyclability. This process includes improving the recyclability of input materials, products manufactured, and packaging materials; such recycling activities have

led to awareness of environmental sustainability and cooperative efforts along the supply chain. Firms design environmentally friendly products which require the sourcing of materials, component parts, packaging materials, as well as distribution, from environmentally sustainable suppliers. Firms have adopted systematic approaches to manage environmental activities. Firms display practices that extend environmental sustainability both upstream and downstream, but currently such initiatives are limited. The themes relating to environmental sustainability practices are shown in Figure 5.4.

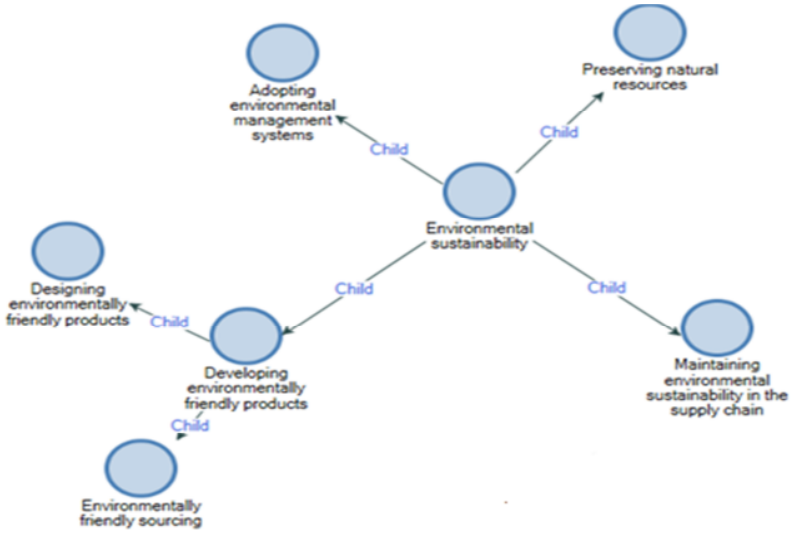

Figure 5.4 The themes of environmental sustainability

5.7 Economic sustainability

The themes for economic sustainability, in this study, represent activities that improve the economic condition of the firm. For example, the sustainability report of Firm 14 (Basic chemical) pinpoints economic sustainability as driving economic growth in customers, employees, shareholders and communities. The themes identified for economic sustainability address research question 2: What sustainability practices are present in firms in the Australian manufacturing sector? Also, they verified the scales used to measure economic sustainability in the quantitative survey.

5.7.1 Improving financial performance

The main theme illustrating economic sustainability is financial performance. The manager in Firm 7 (Beverages) explained the use of financial indicators to capture economic sustainability as follows:

> Obviously, we track a whole heap of financial measures. Probably, the main one is our earnings …we measure our revenue, it's our profitability. Measuring our revenue, measuring our cost base, measuring raw material cost. We measure all those normal financial indicators and ultimately our outcome is our earnings before interest and taxes. (Firm 7, Beverages)

As indicated in the above quotation, profitability is one of the most important aspects of economic sustainability. The importance of profitability is evident from statements such as 'Profit plus break-even' (Firm 1, Food processing), 'Economic performance is certainly very important and basically it is profitability' (Firm 5, Food processing), 'It is basically the profit' (Firm 19, Polymer and rubber) and 'Mostly, it is gross profit' (Firm 31, Machinery and equipment).

One of the reasons for the heavy emphasis on profits is that the shareholders are more interested in profits. This is confirmed by the following statement:

> We are a public listed company. We have a responsibility to our shareholders. We need to make money…So economic sustainability means we generate money for the shareholders. If we stop making money, we stop being in business. (Firm 27, Machinery and equipment)

Therefore, maintaining profitability is important for economic sustainability.

The findings suggest that profitability is an important aspect of financial performance that supports economic sustainability. The literature also supports this view. Pagell and Wu (2009) stated that economically sustainable firms are often involved in practices that increase profitability. De Giovanni (2012) and Vasileiou and Morris (2006) incorporate profitabilty to measure economic sustainability. The current study also reveals that profit is significant as it enables meeting shareholders' expectations. This is supported in the literature where Barnea and Rubin (2010) and Roe (2001) stated that sharehoders expect to maximise their returns and profitability provides higher financial returns. Firms need to meet shareholder expectation for business continuation.

In summary, profit is a main consideration in economic sustainability as it meets shareholder expectations. The findings also support the following item in the quantitative survey: achieved higher profit margins compared to competitors as a measure of economic sustainability (see Table 4.3).

5.7.2 Investing opportunities

Investment decisions help firms to maintain their current competitive market positions. For example, Firm 21 (Non-metallic minerals) has invested in product research and development to maintain market leadership. Furthermore, the firm regularly invests in new technologies or modifies existing technologies to reduce capital and operating costs. Such investments enable firms to compete and maintain cash flow.

Firms such as Firm 18 (Polymer and rubber), Firm 20 (Non-metallic minerals) and Firm 22 (Prefabricated metal) have invested in new businesses to meet market needs. With the objective of entering into the multi-residential construction market, Firm 20 (Non-metallic minerals) acquired another business which had expertise in that field. The firm was also able to extend its product range to serve multi-residential constructions through this acquisition. The investment in business opportunities opens avenues for income generation which can boost the firm's economic position.

The findings show that firms identify opportunities to reduce cost and address changing market needs. Investments in these areas help firms to improve their competitiveness by minimising risk and maximising opportunities. Similarly, Eisenmann (2006) and Song, Yang and Zhang (2011) show that investment decisions allow firms to minimise risks and maximise opportunities. Consequently, investment underpins strong economic performance.

In summary, firms' investment activities involve initial cash outlays, but, provide returns by reducing operating costs and increasing revenues. Investment, therefore, represents an important economic sustainability practice. The findings justify the following item in the quantitative survey: captures return on investment as a measure of economic sustainability (see Table 4.3).

5.7.3 Expanding markets

The findings describe events where firms have expanded their markets as representing economic sustainability practice. For example, Firm 14 (Basic chemical), Firm 19 (Polymer and rubber), Firm 20 (Non-metallic minerals), Firm 21 (Non-metallic minerals) and Firm 22 (Prefabricated metal) have all entered new markets. According to its annual report, Firm 22 (Prefabricated metal) has achieved stability and organic growth of the business, performed strategic acquisitions that have expanded markets and reduced costs. Firm 21 (Non-metallic minerals) has introduced new products into new geographical areas over the past three years. These market expansions have helped these firms to grow their businesses and be economically sustainable.

Another aspect identified in this study that aligns with market expansion is that of increased sales. This is evident in Firm 24 (Automotive), where the manager said that they examine the number of new orders received from customers in assessing the firm's economic sustainability. According to its annual report, Firm 14 (Basic chemical) includes sales growth as an indicator of economic performance and claims to have offered the best solutions at the lowest cost to the markets to increase sales. Sales increments indicate growth within current markets and hence reflect a better economic position.

The study shows firms entering new markets or expanding businesses in current markets. With these activities, firms increase sales and achieve higher revenues. These findings are similar to the studies of Dos Santos, Svensson and Padin (2013), Rao and Holt (2005) and Zailani et al. (2012) which found sales and market share to be important aspects of economic sustainability. Market expansion thus indicates economically sustainable practice.

To summarise, market expansion activities offer more business opportunities and increase revenue. The findings in this study also justify the use of the following items in the quantitative study as measures of economic sustainability: increased sales, increased market share and entering new markets (see Table 4.3).

Section 5.7 has presented evidence that the economic sustainability was centred on conditions for sustained profitability of the firms. There were also other strategies aimed at

cost reduction, and enhancing market presence and sales performance. The themes of economic sustainability are shown in Figure 5.5.

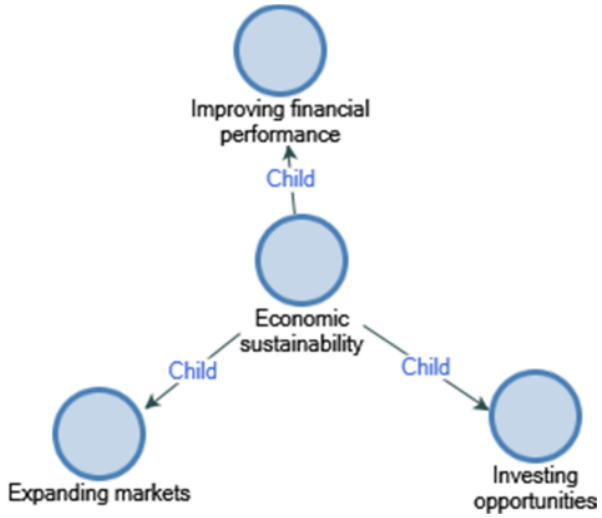

Figure 5.5 The themes for economic sustainability

5.8 Association between the three sustainability dimensions

A consistent theme regarding the interrelatedness of the three sustainability dimensions emerged from the data. According to the managers of Firm 4 (Food processing) and Firm 17 (Basic chemical), they go hand in hand. The manager in Firm 5 (Food processing) explained this in the following manner:

> I believe that they are very well related …I think to have a long-term approach we do need very much to be sustainable in all three. If we take one of those on their own without considering the others, we will fall into dispute with our consumers and suppliers and we won't have a very good position in the supply chain and we won't be able to command the premiums that we need. (Firm 5, Food processing)

The managers often discussed this relationship in the context of how social and environmental sustainability impacts on economic sustainability. They attributed this positive relationship to reduced costs, accompanied by the increased sales, improved reputation and competitiveness stemming from their environmental and social activities.

Firm 5 (Food processing), Firm 14 (Basic chemical), Firm 15 (Basic chemical), Firm 24 (Automotive), Firm 27 (Machinery and equipment) and Firm 31 (Machinery and equipment) provided examples that show how they benefited economically from social

initiatives. For instance, the manager in Firm 31 (Machinery and equipment) said he believed that offering training and development activities has led to good relationships with employees. He further stated that these activities resulted in higher retention and productivity rates which, in turn, ensure the firm's long-term financial performance.

This positive association is also evident in environmental sustainability. The firms' environmental activities, such as waste reduction, also improve their economic performance. For instance, Firm 1 (Food processing) develops by-products from the waste, providing additional income for the firm through selling these by-products. Environmentally friendly products also provide more business opportunities. The manager in Firm 24 (Automotive) considers that offering environmentally friendly solutions enables the firm to be competitive.

The managers also cited instances where sustainability initiatives of their firms enhanced the economic performance of firms in the supply chain. For instance, the publicly available documents of Firm 6 (Beverages) state that the lightweight packaging of their products led to higher efficiency in transportation, in refrigerator storage and on supermarket shelves. This indicates that an environmental initiative of one firm improves the bottom line of another firm. Benefits such as improved productivity are, therefore, evident all along the supply chain.

As indicated in the above examples, environmentally- and socially-oriented actions along the supply chain can lead to economic benefits. However, the managers in Firm 1 (Food processing), Firm 11 (Printing), Firm 13 (Basic chemical), Firm 15 (Basic chemical), Firm 17 (Basic chemical), Firm 18 (Polymer and rubber), Firm 20 (Non-metallic minerals), Firm 23 (Prefabricated metal), Firm 24 (Automotive) and Firm 31 (Machinery and equipment) held divergent views. The manager in Firm 24 (Automotive) expressed the view that social activities have no direct connection to profits, though they provide a better work environment for employees. As a consequence, there is a trade-off between the sustainability dimensions as asserted by the managers in Firm 11 (Printing), Firm 13 (Basic chemical), Firm 15 (Basic chemical), Firm 17 (Basic chemical) and Firm 23 (Prefabricated metal).

The importance of economic sustainability for socially and environmentally responsible practices was further verified by interviewees in Firm 2 (Food processing), Firm 5 (Food processing), Firm 9 (Wood products), Firm 17 (Basic chemical), Firm 18 (Polymer and rubber), Firm 24 (Automotive), Firm 26 (Automotive), Firm 27 (Machinery and equipment) and Firm 31 (Machinery and equipment), who maintain views that such initiatives are costly. Nevertheless, the mangers in Firm 7 (Beverages) and Firm 15 (Basic chemical) stated that environmental practices provide returns in the long term. The manager in Firm 24 (Automotive) explained that during situations of financial hardship, firms are hesitant to allocate resources for social activities. However, the manager believed that the environmental activities are less dependent on economic sustainability as these activities are now embedded in the manufacturing processes and the firms have a commitment to act responsibly towards the environment.

This study reveals the belief of many interviewees that all three sustainability dimensions are important for business success. This finding closely follows the triple bottom line view of Elkington (1997). According to Elkington (1997), firms should maintain all three areas of social, environmental and economic sustainability to achieve long-term business performance. The findings show that social and environmental sustainability practices improve economic sustainability. These results are in line with the literature. Similarly, Mishra and Suar (2010) noticed that firms' employee-related and community-related social sustainability activities enhanced financial performance. This was evidenced through increased productivity, reduced absenteeism, had low employee turnover, fewer labour issues, reduced remediation costs, and improved image of the firm among the public, which then would lead to brand and customer loyalty. All these outcomes have a positive effect on economic sustainability.

Similarly, Rao and Holt (2005) and Zhu, Sarkis and Lai (2013) noticed that environmental sustainability practices improve economic performance. The environmental initiatives reduce waste disposal cost and remediation cost, leading to financial savings. Rao and Holt (2005) observed that the efficiencies achieved through waste reduction and resource utilisation can also enhance competitiveness. Lee et al. (2013) found that firms engaging in

environmental practices are recognised as socially responsible by consumers, which can then lead to increased sales.

The findings also suggest that trade-offs between sustainability and social and environmental practices do not always lead to positive economic outcome. This supports the view of Garcia-Castro, Ariño and Canela (2010) and Torugsa, O'Donohue and Hecker (2013), who found no evidence of economic performance improvements from social sustainability. Furthermore, the present study shows the importance of economic sustainability for social and environmental sustainability initiatives. This finding is in line with Vasileiou and Morris (2006), who found that firms need economic sustainability before they can move towards social and environmental sustainability. The findings of the current study also suggest that the economic sustainability of a firm affects its social sustainability more than its environmental sustainability.

5.9 Chapter summary

The objective of the qualitative study was to answer research questions that identify the attributes of supply chain agility and resilience (question 1), and sustainability practices (question 2) in firms in the Australian manufacturing sector. The qualitative findings were also used to inform the scale items used in the quantitative survey. This chapter has presented the findings of the qualitative study, which are mainly based on interviews and supported by publicly available sustainability reports, annual reports and the information available on the firms' websites. The findings were presented using thematic analysis to explore the various aspects of supply chain agility, resilience and sustainability practices.

The findings also highlight the relationships between the social, environmental and economic dimensions, showing where socially and environmentally responsible practices can impact on the financial position and profitability. While the positive associations were more commonly reported by the participants, some managers emphasised the negative relationship as a trade-off.

In conclusion, the qualitative findings illustrate the attributes of supply chain agility and resilience and sustainability practices of firms in the Australian manufacturing sector. The findings also provide a basis for a quantitative inquiry on a larger scale by verifying the

respective measurement scales established in Table 4.3. Table 5.2 presents a summary of the findings. The next chapter discusses the quantitative findings derived from a survey of firms in the Australian manufacturing supply chains.

Table 5.2 Key points of the findings in the qualitative phase

Theme	Key points
Agility	
1. Identifying changes	Firms identify demand and supply changes and strategic opportunities and threats that could affect a firm's operations. Inter-firm relationships are important to identify supply changes.
2. Adopting various sources of information about changes	Firms work with customers to obtain information that could affect a firm's operations. Firms that have key strategic suppliers obtain information from suppliers. Firms leverage the competencies of business partners to obtain information about industry trends. Firms network with other firms and also use informal communication channels.
3. Responding to changes in a timely manner	Firms respond to demand and supply changes and strategic opportunities and challenges. Firms reconfigure strategies and resources to respond to changes. Firms also work with suppliers to respond to changes in demand.
4. Embedding flexibility into operations	Firms have embedded flexibility into processes and strategies. The flexibility of suppliers is also important to respond to changes in demand.
Resilience	
1. Withstanding sudden changes	Firms prepare contingency plans to execute when disruptions occur. Contingency plans increase resource availability in supply chains.
2. Joint planning to overcome disruptions	Firms cooperate with supply chain partners and competitors to restore operations. Inter-firm relationships help firms to utilise each other's competencies to quickly overcome disruptions.
3. Minimising disruptive events	Firms work with supply chain partners to minimise causes that could lead to supply chain disruptions. These causes relate to operational and sustainability-related issues.
Social sustainability	
1. Ensuring employee welfare	Firms pay attention to the job-related health problems and workplace safety. Firms provide knowledge and skills to employees for career advancement. Firms ensure employee rights at work. Firms provide social benefits to employees.
2. Engaging in ethical business conduct	Firms conduct businesses in an ethical and socially responsible manner. They set rules for employees to conduct their actions within the firm.

Continued on next page

Table 5.2 Continued

Theme	Key points
Social sustainability	
3. Assuring external welfare	Wellbeing of the supply chain partners is included in purchasing decisions. Community wellbeing is provided through philanthropic activities, by providing employment opportunities for locals and by ensuring safety.
4. Maintaining social sustainability in supply chains	Social sustainability of suppliers is a consideration in buying decisions, particularly, the labour practices. Social sustainability of customers is considered if the products can be misused to put human life in danger. Although visits to supplier facilities provide information about suppliers' social sustainability, the visits can have limited value.
Environmental sustainability	
1. Developing environmentally friendly products	Firm select environmentally friendly input materials and environmentally friendly transportation. This influences suppliers to consider improving their environmental practices. Firms design environmentally friendly products to reduce material consumption and the impact on the environment at the end of product life cycles.
2. Preserving natural resources	Firms reduce pollution by minimising waste and emissions. They reduce resource consumption through the efficient use of water and energy and encouraging reuse of packaging materials and final products in the supply chain.
3. Adopting environmental management systems	Firms adopt environmental management systems to implement environmental practices. These systems include certifications such as, ISO 14001 and industry-specific standards.
4. Maintaining environmental sustainability in the supply chain	Firm select environmentally friendly supply chain partners (mostly suppliers and the transport providers).
Economic sustainability	
1. Improving financial performance	Profitability is one of the most important financial indicators of economic sustainability.
2. Investing opportunities	Firms invest in cost reduction and business expansions to remain competitive.
3. Expanding markets	Firms enter new markets and increase sales.

6 Quantitative research findings

6.1 Introduction

Chapter 5 presented the findings of the qualitative phase and identified the attributes of supply chain agility, resilience and the sustainability practices. These findings informed the quantitative phase by validating the scales items used in the survey.

This chapter presents the detailed analysis of the quantitative findings of the survey data. It reports on the measurement and structural components of the research model and presents the findings regarding the hypotheses developed in Chapter 3.

First, the preliminary analysis reports on the screening of the survey data for missing values, multivariate normality and outliers. Then, details of the demographic information of the sample are presented, followed by the testing of constructs for the scale items. The procedures for testing the model are then discussed as follows: first, the measurement models for each construct were validated. Following this, the full measurement model was tested combining all the constructs into a single model. All these measurement models were evaluated using goodness-of-fit statistics and necessary adjustments were done for model improvements. Once the reliability and validity of the final measures were verified, the structural analysis was conducted. At this stage, the structural model was tested and verified with the goodness-of-fit indices. This final structural model was then used to test the hypotheses. The chapter concludes by summarising the major findings from the survey.

6.2 Preliminary analyses

This section discusses the procedures followed to examine the appropriateness of the data and the process of converting them into a suitable format for quantitative analysis. The survey resulted in 230 responses. These data were first examined for their suitability for multivariate statistical analysis (Hair et al. 2010). The sample was

screened for the cases in which the same response choice might have been spontaneously selected for all the questions, or where all the questions may not have been answered. Only one case had the same response choice for all the questions and five cases were completely unanswered. These six cases were discarded from the analysis and the sample was reduced to 224 cases. The resulting sample was subsequently examined for missing values.

6.2.1 Missing values

The data were assessed for missing values using SPSS 21 software. The cases with an excessive number of missing values (greater than 50%) were removed following listwise deletion since such cases are less meaningful (Hair et al. 2010). There were seven cases with more than 50 percent of missing data. After deleting them, 217 cases were left at this stage.

The sample remaining after the listwise deletion had 13 variables in excess of 5 percent of missing data. Further analysis of missing value patterns indicated that the items were missing in a random pattern. Little's test (Little 1988) was performed and showed a significant outcome, indicating that the missing values were not missing completely at random (MCAR). However, obtaining a sample with MCAR characteristics is unrealistic (Muthén, Kaplan & Hollis 1987; Raghunathan 2004). The separate variance *t*-test indicated that the patterns of missing data of some of the variables were predictable from the other variables that are not the dependent variables. According to these features, the missing values demonstrated a missing at random (MAR) pattern in the sample, as most of the missing values were randomly distributed for some specific items (Baraldi & Enders 2010; Tabachnick & Fidell 2007).

The missing values were treated with the expectation maximisation (EM) algorithm in SPSS 21. This method has been proven superior to other methods available for treating missing values if the data are MAR or MCAR (Hair et al. 2010; Tabachnick & Fidell 2007). In MAR situations, estimation methods based on the maximum likelihood (ML) approach, such as the EM algorithm, are suitable (Allison 2003; Baraldi & Enders 2010). This method has demonstrated similar estimations irrespective of the percentage of missing values. Even with 32 percent of missing values, the EM method has generated similar values as in the 2 percent of missing values (Olinsky, Chen & Harlow

2003). Therefore, considering the present sample size and the number of missing values, the EM method was applied in treating missing data.

6.2.2 Multivariate normality and outliers

Next, the sample was tested for multivariate normality and outliers. First, the univariate normality was confirmed from the histograms of the sample distributions and from the skewness and kurtosis values. Skewness should be less than 3 and kurtosis less than 10 (Kline 2010). The maximum skewness value was 2.150 and the maximum kurtosis was 6.959, which are within the acceptable range of less than 3 (skewness) and 10 (kurtosis) for univariate normality. As these results showed that each item was normally distributed, the sample was examined for multivariate normality. Mardia's coefficient of multivariate kurtosis and its normalised score, which is equivalent to a z-score, were 297.881 and 38.797, respectively. Normalised coefficients greater than 3 reflect non-normality (Mardia 1970, 1974). Since the normalised coefficient of 38.797 is higher than the threshold, the sample was multivariate non-normal. Under ML estimation, non-normality makes negligible changes to parameter estimates and under medium non-normality, there is no effect on the standard errors of estimates (Lei & Lomax 2005). However, obtaining multivariate non-normality is impossible in the real world (Lei & Lomax 2005). One approach to dealing with non-normal data is to delete outliers from the sample (Kline 2010).

The univariate and multivariate outliers influence the factor solution (Tabachnick & Fidell 2007). Outliers can distort the number of factors extracted as they artificially increase the eigenvalues of the correlation matrix (Treiblmaier & Filzmoser 2010). Furthermore, outliers can change the sample covariance or correlation matrix in structural equation modelling (SEM) (Yuan, Marshall & Bentler 2002). The outliers were, therefore, detected using Mahalanobis distance. The values of Mahalanobis distance provided in AMOS 21 are less reliable since the estimates are based on the assumption of multivariate normality of the data (Blunch 2013). Mahalanobis distances were, therefore, calculated in SPSS 21 and compared with the critical value of the chi-square (χ^2) distribution to locate any outliers. For the 39 variables in the survey, the critical value of χ^2 distribution at probability $p = 0.001$ is 72.055. The outliers were those cases with Mahalanobis distance larger than the critical value (Tabachnick & Fidell 2007). There were 13 such outlier cases which represented 6 percent (13/217) of

the cases in the sample. They were removed before carrying out factor analysis to avoid the results being affected and to remedy the non-normality. These outliers were randomly distributed among the different firms that represent the various stages in manufacturing supply chains. Deletion of outliers, therefore, had no bias towards a particular supply chain stage. The removal of outliers reduced the sample size from 217 to 204.

After deleting the outliers, the cases that represent the same firm were combined by obtaining the mean values of each item (Enticott, Boyne & Walker 2009; Han et al. 2006). Combining cases is important as the unit of analysis of the study is at the organisational level. After combining them, the sample size was reduced to 200 and this sample was used for the final statistical analysis.

6.2.3 Sample size

Sample size is important in SEM as some of the statistical algorithms used in SEM are unreliable when the sample is small (Boomsma & Hoogland 2001; Kim 2005; Kline 2010). Moreover, sample size increases statistical power by reducing sampling error (Bollen & Stine 1992; Collins & Cordon 1997; Hair et al. 2010). For a sample of 200 or more, the effect of non-normality of data is negligible and is sufficient to provide the basis for ML estimation (Hair et al. 2010). Furthermore, a sample of 200 or more prevents non-convergence problems and improper solutions (Bagozzi & Yi 1988; Boomsma & Hoogland 2001; Hair et al. 2010; Kline 2010). Based on the reasoning above, this sample represents an adequate size for SEM analysis as it meets the requirement.

6.3 Sample characteristics

The demographic characteristics of the sample used in the final analysis are shown in Table 6.1. Of the 200 responses, the majority of participants were from manufacturing (32%). The next highest participation was from transport, postal and warehousing (23%). Mining firms represent 8 percent of respondents, followed by retailers (6.5%) and electricity, gas, water and waste services (6.5%), which provide services for the operations at manufacturing facilities. The other firms represented in the sample that contributed to manufacturing supply chains were professional, scientific and technical services (5.5%), wholesalers (4%), agriculture, forestry and fishing (4%), information,

media and telecommunications (3%), construction (2.5%), health care and social assistance (1%) and rental, hiring and real estate services (0.5%).

Table 6.1 Profile of surveyed firms used in analysis

Demographic information	Frequency	Percentage
Category		
Manufacturing	64	32.0
Transport, postal and warehousing	46	23.0
Mining and resources	16	8.0
Retail trade	13	6.5
Electricity, gas, water and waste services	13	6.5
Professional, scientific and technical services	11	5.5
Wholesale trade	8	4.0
Agriculture, forestry and fishing	8	4.0
Information media and telecommunications	6	3.0
Construction	5	2.5
Health care and social assistance	2	1.0
Rental, hiring and real estate services	1	0.5
Others	7	3.5
Total	**200**	**100.0**
Stage represented in manufacturing supply chain		
Input supplier	31	10.5
Manufacturer	64	32.0
Wholesaler	8	8.0
Retailer	13	6.0
Logistics, transport and warehouse	46	27.5
Customer	33	14.0
Other	5	2.0
Total	**200**	**100.0**
Organisation size (number of employees)		
1–19	46	23.0
20–199	48	24.0
Greater than 200	106	53.0
Total	**200**	**100.0**
Annual revenue (AUD)		
0 to < 50K	7	3.5
50K to 200K	11	5.5
200K to <1M	23	11.5
1M to < 50M	56	28.0
50M to < 250M	21	13.0
Greater than 250M	75	37.5
Missing data	2	1.0
Total	**200**	**100.0**
Ownership		
Australian-owned	128	64.0
Foreign-owned	72	36.0
Total	**200**	**100.0**

Based on the stage that the firms represent in the manufacturing supply chain in Australia, 32 percent of firms represented manufacturing focal firms while 10.5 percent represented input suppliers. In addition, 27.5 percent of firms belonged to the logistics and distribution stage, 8 percent represented by wholesalers and 6 percent represented by retailers. Another 14 percent of respondents represented downstream customer firms who purchase manufactured products. This category included areas such as construction, health care, accommodation and restaurant services.

Out of the 200 respondent firms, 106 were large firms. According to the Australian Bureau of Statistics (ABS) classification, firms that have fewer than 19 employees are classified as small firms, those with 20–199 employees are medium-sized firms and those with more than 200 employees are considered as large firms (ABS 2017). Based on this classification, the sample consisted of 53 percent large firms, 24 percent of medium-sized firms and 23 percent small firms.

In assessing the annual revenue of the firms in this sample, the majority had annual revenues less than AUD 250 million (61.5%), while 37.5 percent of firms had annual revenues higher than AUD 250 million. A detailed distribution of the firms based on annual revenue is presented in Table 6.1. Furthermore, 64 percent of the firms in the sample were Australian-owned while 36 percent were foreign-owned firms.

The 80.5 percent of managers who responded to the survey were supply chain or operations managers. Executive level officers represented 10.5 percent of the sample, while 5.5 percent of the respondents were owners, and 3.5 percent of the respondents did not specify their positions. The majority of the respondents (41%) had worked for less than 5 years in their current position. 16.5 percent of respondents had worked between 5 and 10 years, while 17.5 percent of respondents had been employed in the current employment capacity for more than 10 years, 19.5 percent of respondents had worked for less than one year in the firm.

The sample represented all the stages in manufacturing supply chains. The firms were diverse in terms of their size and industry categories. Additionally, the respondents were knowledgeable with substantial experience based on the positions held in the firm. This sample is, therefore, suitable for the analysis, as it is representative of firms in manufacturing supply chains in Australia.

6.4 Descriptive statistics

The descriptive statistics of the manifest variables, which are the measurable indicators of the theoretical constructs (agility, resilience, and social, environmental and economic sustainability), were examined using SPSS 21. These results are shown in Table 6.2. The scale value of 1 indicates the most favourable agreement while 7 represents the least favourable agreement to the manifest variable. Mean values of all the manifest variables had values below the mid-point (ranging from 1.71 to 3.45), except in the variable en_cu, which showed a mean of 4.12.

The mean values, which are lower than the mid-point of the measurement scale, indicate a higher level of presence of the characteristic measured by the manifest variable. The slightly higher value above the middle point for the variable en_cu reflected that the firms generally did not consider the environmental sustainability of their customers. Since the values are distributed around the mean, this sample is appropriate for further analysis.

Table 6.2 Descriptive statistics of the sample

Item	Description	Mean	Std. Dev.
Agility			
ag_od	Ability to detect strategic opportunities or challenges in a timely manner	2.53	1.119
ag_of	Ability to reconfigure supply chain resources in a flexible manner to respond to strategic opportunities or challenges	2.80	1.291
ag_dd	Ability to detect changes in demand in a timely manner	2.67	1.129
ag_sd	Ability to detect changes in supply in a timely manner	2.57	1.083
ag_df	Ability to reconfigure supply chain resources in a flexible manner to respond to changes in demand	2.82	1.265
ag_sf	Ability to reconfigure supply chain resources in a flexible manner to respond to changes in supply	3.00	1.643
ag_sq	Ability to reconfigure supply chain resources quickly to respond to changes in supply	2.93	1.284
ag_dq	Ability to reconfigure supply chain resources quickly to respond to changes in demand	2.92	1.286
ag_in	The use of various sources of information to keep abreast with operational changes	2.39	0.969
Resilience			
re_res	Ability to adequately respond to unexpected changes in the business environment	2.65	0.977
re_ret	Returning quickly to its original state after being disturbed by sudden changes	2.84	1.125
re_cnt	Maintaining a desired level of control over structure and functions of the organisation during sudden changes in the supply chain	2.80	1.085
re_lrn	Ability to learn from unexpected events in the supply chain	2.53	1.072
re_adp	Ability to adapt to sudden changes in the supply chain easily	2.78	1.466
re_awr	Ability to maintain high situational awareness at all times of current and long-term changes in markets	2.92	1.130
re_col	Collaborating with supply chain partner firms in responding to changes in markets	2.73	1.117
re_min	Minimising the causes of unexpected changes in markets	2.89	1.150

Continued on next page

Table 6.2 continued

Item	Description	Mean	Std. Dev.
Social sustainability			
so_hs	Improving occupational health and safety of employees	1.71	0.911
so_sk	Developing employee skills	2.28	1.147
so_su	Considering social sustainability of suppliers	2.64	1.299
so_cu	Considering social sustainability of customers	2.67	1.385
so_et	Practising ethical business conduct in business transactions	1.76	0.942
so_sw	Supporting welfare and betterment of suppliers	2.45	1.512
so_cw	Supporting welfare and betterment of wider community	2.25	0.938
so_rg	Ensuring rights of employees	1.99	1.040
Environmental sustainability			
en_po	Reducing pollution, waste and hazardous materials	2.11	1.011
en_so	Designing environmentally friendly business solutions	2.37	1.141
en_su	Selecting suppliers based on environmental criteria	3.71	1.620
en_cu	Selecting customers based on environmental criteria	4.12	1.444
en_ms	Implementing environmental management systems	2.51	1.171
en_rc	Engaging in recycling activities	2.24	1.207
en_cs	Cooperating with suppliers in environmental activities	2.72	1.294
en_cc	Cooperating with customers in environmental activities	2.68	1.293
Economic sustainability (Based on performance over past 3 years)			
ec_mk	Entered new markets	2.57	1.610
ec_pr	Charged premium prices on products or services	3.24	1.661
ec_ma	Achieved higher profit margins compared to competitors	3.45	1.420
ec_sa	Increased sales	3.07	1.716
ec_sh	Increased market share	3.18	1.772
ec_ro	Improved return on investment	3.18	1.575

6.5 Measurement models

Upon confirming the suitability of the data for multivariate statistical analysis, SEM procedures were applied. This began by establishing measurement models for each construct. In order to assess the appropriateness of the measurement items, exploratory factor analysis (EFA) and confirmatory factor analysis (CFA) were performed. The sample was split randomly into two independent sub-samples to perform EFA and CFA (DeVellis 2012). One sub-sample was used to determine the suitability of the manifest variables to represent latent variables (for EFA), and hence was considered as the calibration sample. The other sub-sample was used to replicate the findings of the calibration sample (CFA) and to validate the measurements and was considered as the validation sample (Anderson & Gerbing 1984).

The measurement models of each construct were tested separately for unidimensionality before testing them all in a combined model. The classical measurement theory assumes that the measurements of a construct are unidimensional (DeVellis 2012; Shah & Goldstein 2006). Since all the items for the constructs were reflective indicators in this study, the items measuring the same construct should be unidimensional with a positive correlation between the items and the constructs (Bollen & Lennox 1991). As the data were shown to be multivariate non-normal, the principal axis factoring (PAF) procedure was followed for factor extraction in EFA (Fabrigar et al. 1999). For the same reason, a Bollen-Stine bootstrap χ^2 test was performed and the *p* value was examined (Blunch 2013) in addition to the global fit indices in CFA.

The global fit indices and the respective cut-off values considered in the model evaluation in this study are shown in Table 6.3. Fit indices were selected to cover 3 types of indices: absolute, incremental and parsimonious fit measures (Schumacker & Lomax 2004; Tabachnick & Fidell 2007). The standardised root mean square residual (SRMR) was examined for absolute fit measure, comparative fit index (CFI) was selected to measure incremental fit and the normed χ^2 was used for the parsimonious fit index. Even though the goodness-of-fit index (GFI), the Tucker-Lewis index (TLI) and root mean square error of approximation (RMSEA) were reported, they were not considered in the model evaluation due to their poor performance in small samples (n < 250) (Hu & Bentler 1998, 1999).

Table 6.3 Model fit indices and the criteria used in the study

Model fit indicator	Criteria	Reference
χ^2	-	-
df	-	-
p	> 0.05	Jöreskog and Sörbom (1982)
Standardised root mean square residual (SRMR)	< 0.08	Hu and Bentler (1999)
Root mean square error of approximation (RMSEA)	<0.08	Browne and Cudeck (1992); MacCallum, Browne and Sugawara (1996)
Comparative fit index (CFI)	> 0.90	Bentler and Bonett (1980)
Goodness-of-fit index (GFI)	> 0.90	Bentler and Bonett (1980)
Tucker-Lewis index (TLI)	> 0.90	Bentler and Bonett (1980)
Normed χ^2 (χ^2/df)	1–2	Bollen (1989)

6.5.1 Measurement model for agility

An EFA was conducted with the calibration sample (n = 100). Out of the 36 correlations, only four had values less than 0.3 and all the partial correlations were less

than 0.7. The Kaiser-Meyer-Olkin (KMO) test of sampling adequacy was 0.832 and Bartlett's test of sphericity was significant ($\chi^2 = 523.143$, $p < 0.001$), indicating that the data were suitable for an EFA. Further examination showed that all the items had communalities greater than 0.3 except for the item ag_sf, which showed a value of 0.207. This low communality value indicated that the item accounted for little variance of the agility construct and was hence a candidate for deletion.

After deleting the item ag_sf, the remaining items were again subjected to an EFA. Only one correlation had a value of less than 0.3 and all the partial correlations were below the cut-off point of 0.7. This analysis resulted in a KMO test value of 0.844 and a significant Bartlett's test of Sphericity value ($\chi^2 = 487.675$, $p < 0.001$). The minimum item communality was 0.325. The item communalities indicated that these items could explain an adequate amount of variance of the agility construct.

Principal axis factoring with direct oblimin rotation revealed a one-factor solution with an eigenvalue greater than 1. The total variance explained for this one-factor solution was 54.076 percent. An inspection of the scree plot also revealed a clear break after the first factor as in Figure 6.1. All the items loaded had values greater than 0.5. These results revealed the unidimensionality of the items used to measure agility.

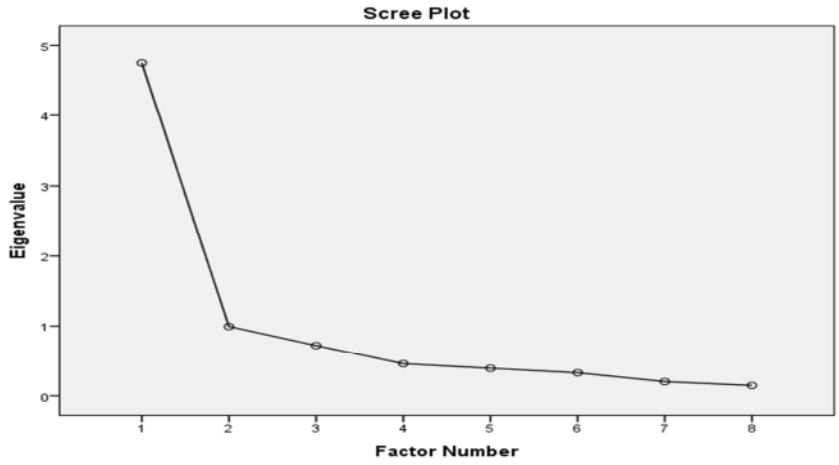

Figure 6.1 Scree plot for agility

The EFA structure was then validated with the second sample (n = 100) using CFA. The results indicated a poor model fit with χ^2 (20) = 62.005, $p = 0.000$ and Bollen-Stine $p = 0.022$. The model fit indices were $\chi^2/df = 3.1$, CFI = 0.927, GFI = 0.856, TLI = 0.898, RMSEA = 0.146 and SRMR = 0.0683. Even though CFI and SRMR values reached the minimum levels, the other indices were below the threshold values.

The modification indices showed that freeing a path between the error terms of ag_sd and ag_dd would improve the model fit in a subsequent model. An examination of the standardised residual covariance matrix also indicated a value of 2.026 for these particular items. The value higher than 2 suggests the inability of the model to explain the shared variance between the items (Jöreskog & Sörbom 1982). The item ag_dd was, therefore, dropped from the model since ag_dd had a much lower squared multiple correlation and standardised loading values than ag_sd (ag_dd = 0.466, 0.682; ag_sd = 0.552, 0.743, respectively).

The resulting model indicated χ^2 (14) = 29.430 and p = 0.009. The data demonstrated model fit after bootstrapping where Bollen-Stine p was not significant (p = 0.138). The fit indices were χ^2/df = 2.102, CFI = 0.969, GFI = 0.919, TLI = 0.953, RMSEA = 0.106 and SRMR = 0.0562. The value of χ^2/df indicated a misfit of the model. The modification index showed an unexplained variance among the items ag_od and ag_in. These two items had a residual of 2.341 in the standardised residual covariance matrix. The item ag_in had the lowest squared multiple correlation (0.202) and standardised loading (0.449), which were below the minimum requirements; consequently, the item ag_in was removed and a CFA was conducted.

The new model resulted in χ^2 (9) = 13.206, p = 0.153 and Bollen-Stine bootstrap p = 0.334 which indicated a satisfactory model fit. The fit indices were within acceptable levels as χ^2/df =1.467, CFI = 0.991, GFI = 0.957, TLI = 0.985, RMSEA = 0.069 and SRMR = 0.0270, indicating a good model fit. However, the item ag_od had a low squared multiple correlation (0.354) and standardised loading (0.595), which were below the minimum requirements. Furthermore, all the manifest variables were negatively loaded on the factor. Considering these facts, the item ag_od was also dropped from the model which resulted in a good fitting model with χ^2 (5) = 7.924, p = 0.160, χ^2/df =1.585, CFI = 0.993, GFI = 0.970, TLI = 0.986, RMSEA = 0.077 and SRMR = 0.0195. The factor loadings were significant ($p < 0.001$) and ranged from 0.713 to 0.921. The measurement model of agility that resulted after CFA is shown in Figure 6.2. The results of the EFA and CFA for the measurement model for agility are shown in Table 6.4.

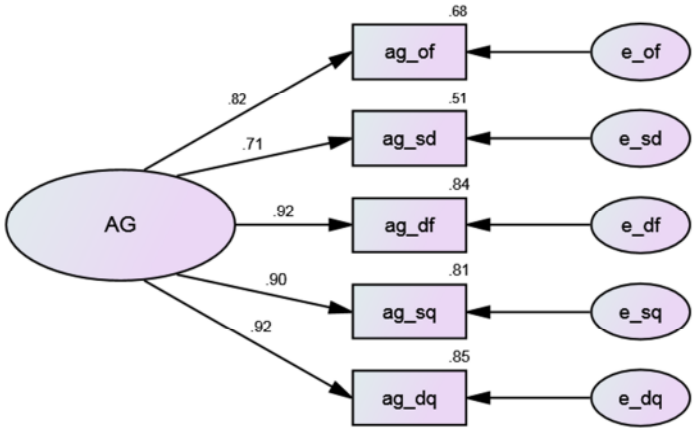

Figure 6.2 Measurement model for agility

Table 6.4 Factor analysis of agility items

Item		EFA		CFA		
		Loading	Variance explained	SFL	*t*-value	SMC
ag_od	Ability to detect strategic opportunities or challenges in a timely manner	0.587	54.08%	Item dropped in CFA		
ag_of	Ability to reconfigure supply chain resources in a flexible manner to respond to strategic opportunities or challenges	0.783		0.823	9.906*	0.677
ag_dd	Ability to detect changes in demand in a timely manner	0.710		Item dropped in CFA		
ag_sd	Ability to detect changes in supply in a timely manner	0.570		0.713	8.055*	0.508
ag_df	Ability to reconfigure supply chain resources in a flexible manner to respond to changes in demand	0.860		0.917	11.833*	0.842
ag_sq	Ability to reconfigure supply chain resources quickly to respond to changes in supply	0.789		0.901	11.463*	0.811
ag_dq	Ability to reconfigure supply chain resources quickly to respond to changes in demand	0.832		0.921	11.905*	0.848
ag_in	The use of various sources of information to keep abreast with operational changes	0.696		Item dropped in CFA		
		Eigenvalue = 4.752; KMO =.844; Bartlett's test of sphericity: χ^2 = 487.675, p<.001		$\chi^2(5)$ =7.924, χ^2/df =1.585, p =.160, RMSEA=.077, SRMR =.0195,GFI=.970, CFI=.993,TLI=.986		

Note: EFA=Exploratory Factor Analysis; CFA=Confirmatory Factor Analysis; SFL=Standardised Factor Loadings; SMC=Squared Multiple Correlation; KMO=Kaiser-Meyer-Olkin Measure of Sampling Adequacy; RMSEA=Root Mean Square Error of Approximation; SRMR=Standardised Root Mean Square Residual; GFI=Goodness-of-Fit Index; CFI=Comparative Fit Index; TLI=Tucker-Lewis Index; *p<.001

6.5.2 Measurement model for resilience

The EFA with the calibration sample (n = 100) for the construct resilience resulted in only two correlations of less than 0.3. These values were 0.272 and 0.276 and were thus close to the cut-off value. All the partial correlations fell within the acceptable range. The KMO test result of sampling adequacy was 0.862 and Bartlett's test of sphericity was significant ($\chi^2 = 413.259$, $p < 0.001$). These figures indicated the adequacy of the sample for an EFA. Only the item re_adp had a lower communality of 0.285. This item was deleted because of its poor ability to explain the total variance of the construct.

The remaining items were again tested in EFA. The results indicated a KMO test of sampling adequacy of 0.853. The Bartlett's test of sphericity was significant ($\chi^2 = 380.673$, $p < 0.001$). Only one correlation was less than 0.3 and all the partial correlations were less than 0.7, indicating the suitability of the data for an EFA. The communality of items was higher than 0.3, and hence reflected the ability of all the items to explain the construct.

Principal axis factoring with direct oblimin rotation showed a single factor solution with an eigenvalue greater than 1, which explained 54.91 percent of variance. This was further confirmed by the scree plot, which showed one clear factor, as shown in Figure 6.3. These results indicated that the items measure only one factor and are unidimensional.

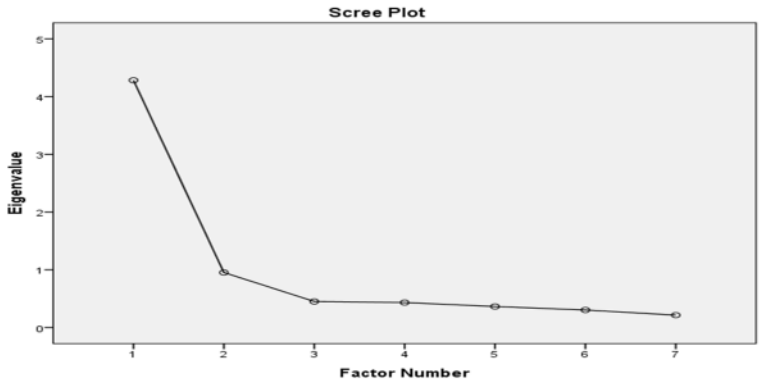

Figure 6.3 Scree plot for resilience

The resulting EFA structure was validated on a sample of data (n = 100) using CFA. The data did not fit the model well initially with χ^2 (14) = 27.197, $p = 0.018$. After a bootstrapping procedure, the data fit the model, with Bollen-Stine $p = 0.202$. The model fit indices were χ^2/df =1.943, CFI = 0.969, GFI = 0.923, TLI = 0.954, RMSEA = 0.098 and SRMR = 0.0404. The RMSEA value indicated a mediocre model fit (MacCallum,

Browne & Sugawara 1996), while all the other indices demonstrated a good fitting model. The modification index of 9.942 between the error terms of re_ret and re_min suggested freeing a path between the error terms. Even though a value higher than 9 is worth considering for improvements, model changes based on the modification index can capitalise on chance (Schumacker & Lomax 2004). The squared multiple correlations and the standardised loadings of both these items were above the cut-off points. Therefore, no modifications were made to the model. The items loaded significantly ($p < 0.001$), ranging from a low of 0.696 to a high of 0.852. The results of CFA are shown in Figure 6.4 and the measurement model for resilience is presented in Table 6.5.

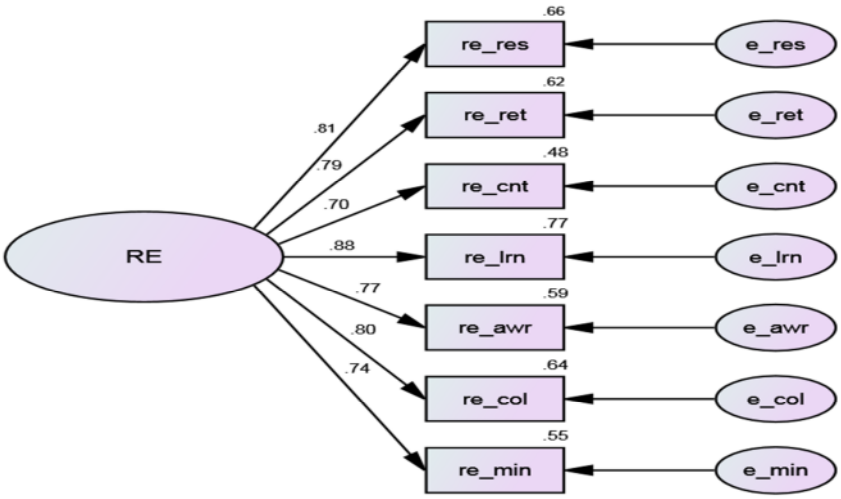

Figure 6.4 Measurement model for resilience

Table 6.5 Factor analysis of resilient items

Item		EFA		CFA		
		Loading	Variance explained	SFL	*t*- value	SMC
re_res	Ability to adequately respond to unexpected changes in the business environment	0.759	54.91%	0.810	9.564*	0.552
re_ret	Returning quickly to its original state after being disturbed by sudden changes	0.629		0.788	9.178*	0.620
re_cnt	Maintaining a desired level of control over structure and functions of the organisation during sudden changes in the supply chain	0.747		0.696	7.719*	0.485
re_lrn	Ability to learn from unexpected events in the supply chain	0.797		0.877	10.841*	0.769
re_awr	Ability to maintain high situational awareness at all times of current and long-term changes in markets	0.822		0.768	8.853*	0.590
re_col	Collaborating with supply chain partner firms in responding to changes in markets	0.685		0.803	9.994*	0.645
re_min	Minimising the causes of unexpected changes in markets	0.729		0.743	8.440*	0.552
		Eigenvalue = 4.282; KMO =.853; Bartlett's test of sphericity: χ^2 =380.673, p<.001		$\chi^2(14)$ = 27.197, χ^2/df=1.943, p=.018, RMSEA=.098, SRMR=.0404,GFI=.923, CFI=.969,TLI=.954		

Note: EFA=Exploratory Factor Analysis; CFA=Confirmatory Factor Analysis; SFL=Standardised Factor Loadings; SMC=Squared Multiple Correlation; KMO=Kaiser-Meyer-Olkin Measure of Sampling Adequacy; RMSEA=Root Mean Square Error of Approximation; SRMR=Standardised Root Mean Square Residual; GFI=Goodness-of-Fit Index; CFI=Comparative Fit Index; TLI=Tucker-Lewis Index; *p<.001

6.5.3 Measurement model for social sustainability

The EFA of the calibration sample (n = 100) of the social sustainability construct indicated only one correlation with a value less than the cut-off of 0.3. This lowest value (0.296) was close to the cut-off value. All the partial correlations were in the acceptable range of less than 0.7. The result of a KMO test of sampling adequacy showed a value of 0.832. Bartlett's test of sphericity was significant (χ^2 = 381. 792, p < 0.001). These results suggested the suitability of the data to perform EFA. The EFA results showed a communality of 0.242 for the item so_sw, which is deemed less suitable in explaining the variance of the construct; accordingly, this item was removed from the subsequent analysis and an EFA was performed again.

The results showed that all the correlations were higher than 0.3 and the partial correlations were less than 0.7. The KMO test result of sampling adequacy was 0.830. Bartlett's test of sphericity was significant ($\chi^2 = 350.407$, $p < 0.001$). Accordingly, EFA can be performed on the sample. The EFA results showed the lowest communality of 0.294 for the item so_hs. This item had a mean of 1.71 and the standard deviation was 0.911. Both the mean value, which is closer to the lower band of the scale, and the low variance, reflect the high presence of occupational health and safety activities in the firms surveyed. This finding was also confirmed by the results of the qualitative phase of the study. During the interviews, the managers had emphasised their engagement in employee occupational health and safety related activities. Considering the closeness of the communality of the item so_hs to the cut-off point, the factor loading of 0.543 and the relevance to the organisations, it was retained for further analysis.

Principal axis factoring with direct oblimin rotation revealed a single factor solution with an eigenvalue greater than 1. The scree plot showed one remarkable point above the elbow, as shown in Figure 6.5. This factor explained 50.959 percent of the variance of the social sustainability construct. All the items loaded well onto the factor with a minimum value of 0.543 for the item so_hs. This high factor loading of the item so_hs further justified retaining it in the analysis. According to these results, the unidimensionality of social sustainability was affirmed.

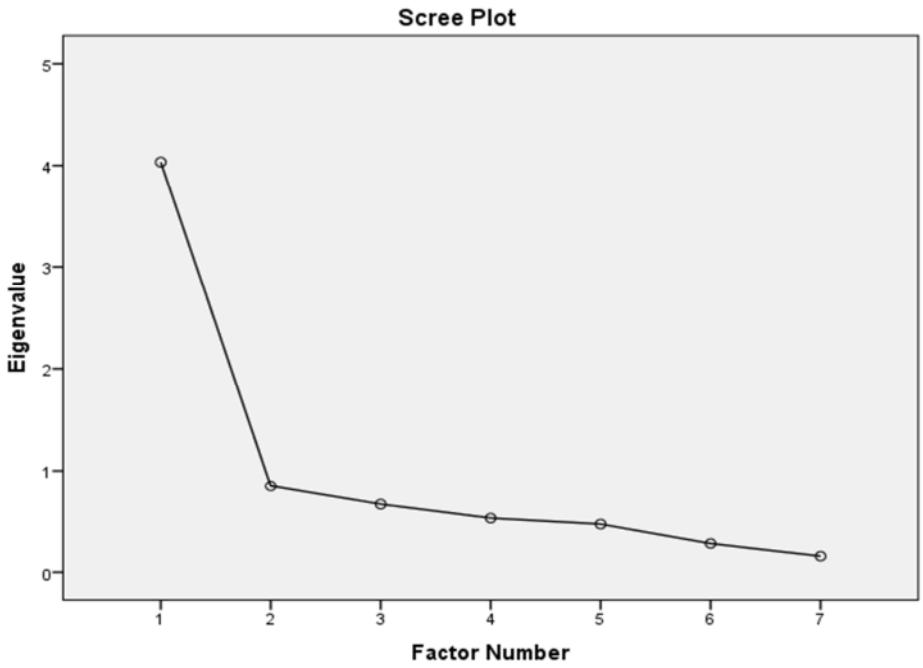

Figure 6.5 Scree plot for social sustainability

The results of EFA were validated with CFA. The results suggested a poor fit, with measures being χ^2 (14) = 110.409, p = 0.000, Bollen-Stine p = 0.002, χ^2/df = 7.886, CFI = 0.701, GFI = 0.771, TLI = 0.551, RMSEA = 0.264 and SRMR = 0.1167. The modification index showed the largest discrepancy of 48.190 between the error terms of so_cu and so_su. The standardised residual of these items (4.097) further confirmed the inability of the model to explain the variance of the construct. These two items were, therefore, candidates for deletion. The squared multiple correlations and the standardised loadings were examined to determine the first item to delete. The item so_su had lower values (0.307, 0.563) than so_cu (0.350, 0.592), respectively. Item so_su was, therefore, removed from the model, and the new model was again tested with CFA to confirm its structure.

The results indicated a poor model fit with χ^2 (9) = 20.532 and p = 0.015. But after bootstrapping, it showed a satisfactory model fit with Bollen-Stine p = 0.224. The other fit indices were χ^2/df = 2.281, CFI = 0.945, GFI = 0.941, TLI = 0.909, RMSEA = 0.114 and SRMR = 0.0545. All the indices, except χ^2/df and RMSEA showed an acceptable model fit. The standardised residual matrix had a value less than 2. This indicated that the items in the estimated model and the observed model fit well (Hair et al. 2010). However, the item so_cu had a lower squared multiple correlation of 0.242 and a standardised factor loading of 0.492. Furthermore, it had a variance of 1.414, which reflected that the majority of the item variation was due to an error. These facts indicated the inability of the item so_cu to adequately explain the variance of the social sustainability construct. The item so_cu was, therefore, deleted from the measurement model. The final model with data showing χ^2 (9) = 5.958, p = 0.310, χ^2/df =1.192, CFI = 0.995, GFI = 0.976, TLI = 0.989, RMSEA = 0.044 and SRMR = 0.0326 indicated a satisfactory model fit. The factor loadings were significant at $p < 0.001$. The lowest and the highest factor loadings were 0.606 and 0.852, respectively. These results are shown in Figure 6.6 and in Table 6.6.

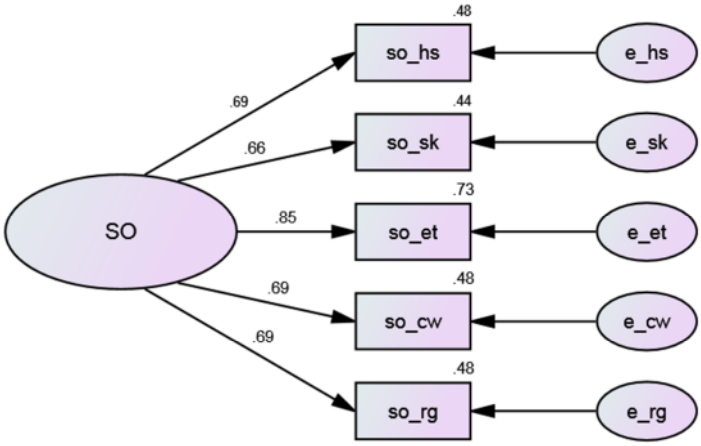

Figure 6.6 Measurement model for social sustainability

Table 6.6 Factor analysis of social sustainability items

Item		EFA		CFA		
		Loading	Variance explained	SFL	*t*-value	SMC
so_hs	Improving occupational health and safety of employees	0.543	50.959%	0.693	7.380*	0.480
so_sk	Developing employee skills	0.778		0.660	6.919*	0.435
so_su	Considering social sustainability of suppliers	0.817		Item dropped in CFA		
so_cu	Considering social sustainability of customers	0.755		Item dropped in CFA		
so_et	Practising ethical business conduct in business transactions	0.646		0.852	9.767*	0.726
so_cw	Supporting welfare and betterment of wider community	0.671		0.692	7.360*	0.479
so_rg	Ensuring rights of the employees	0.750		0.690	7.333*	0.476
		Eigenvalue = 4.033; KMO =.830; Bartlett's test of sphericity: χ^2 =350.407, p<.001		$\chi^2(9) = 5.958$, χ^2/df=1.192, p=.310, RMSEA=.044, SRMR=.0326,GFI=.976, CFI=.995,TLI=.989		

Note: EFA=Exploratory Factor Analysis; CFA=Confirmatory Factor Analysis; SFL=Standardised Factor Loadings; SMC=Squared Multiple Correlation; KMO=Kaiser-Meyer-Olkin Measure of Sampling Adequacy; RMSEA=Root Mean Square Error of Approximation; SRMR=Standardised Root Mean Square Residual; GFI=Goodness-of-Fit Index; CFI=Comparative Fit Index; TLI=Tucker-Lewis Index; *p<.001

6.5.4 Measurement model for environmental sustainability

EFA was conducted with the calibration sample (n = 100). EFA results indicated one correlation of less than 0.3. The partial correlations were less than 0.7. KMO test of sampling adequacy was 0.853. Bartlett's test of sphericity was significant (χ^2 = 430.241, p < 0.001). These results indicated the adequacy of the sample for EFA. An examination

of the communality table indicated a minimum value of 0.294 for en_su. Nevertheless, this item was kept for further analysis, since the communality value was closer to the cut-off point and the factor loading (0.543) was within the acceptable range.

Principal axis factoring with direct oblimin rotation suggested a one-factor solution with 50.963 percent of total variance explained. The scree plot also showed only a single significant factor, as shown in Figure 6.7. All the factor loadings were above 0.5, indicating the adequacy of the item loadings onto the factor. These facts confirmed the unidimensional nature of the construct.

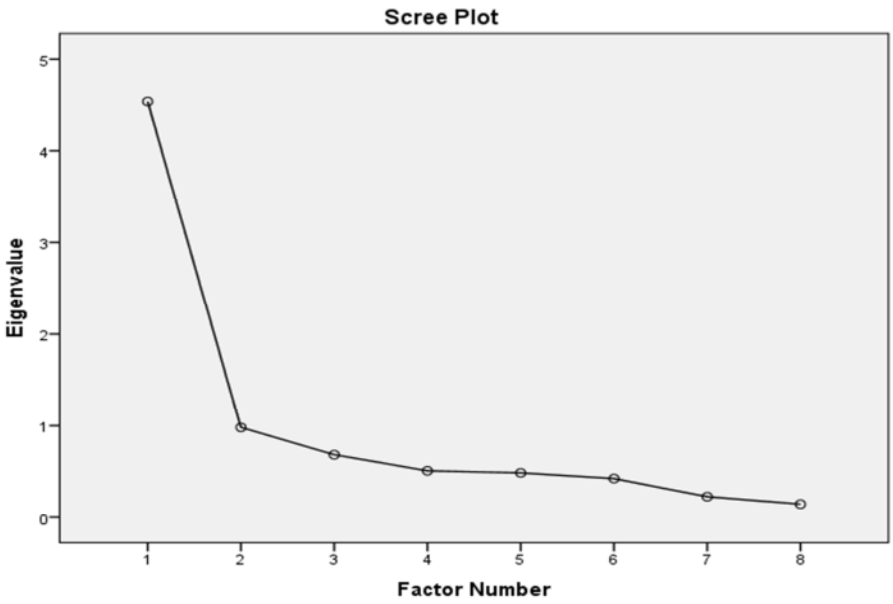

Figure 6.7 Scree plot for environmental sustainability

The resulting EFA structure was validated with the second sample (n = 100) using CFA. The initial model resulted in χ^2 (20) = 99.215, p = 0.000, χ^2/df = 4.961, Bollen-Stine p = 0.002, CFI = 0.796, GFI = 0.784, TLI = 0.715, RMSEA = 0.2 and SRMR = 0.1225, indicating a poor model fit. The modification index of 24.046 suggested freeing a path between the error terms of en_po and en_so. The standardised residual covariance of the items en_po and en_so (3.656) further confirmed the misfit between the two items. Further examination revealed that the item en_po had also demonstrated standardised residual covariance values greater than 2 with two other items. The item en_po was, therefore, excluded from the model.

After removing en_po, the data did not fit the model with measures being χ^2 (14) = 40.528, p = 0.000 and χ^2/df = 2.895, Bollen-Stine p of 0.008, GFI = 0.893, TLI = 0.871,

RMSEA = 0.138 and SRMSR = 0.0880. Only CFI satisfied the criteria with the value of 0.914. The largest modification index of 18.019 suggested a misspecification between the items en_ms and en_rc. The standardised residual value (3.056) also provided evidence of misfit between these two items. The item en_ms was deleted as it was associated with an error variance (1.112) higher than the item en_rc.

The results indicated a satisfactory model fit with χ^2 (9) = 14.509, p = 0.105, Bollen-Stine p = 0.122, χ^2/df = 1.612, CFI = 0.979, GFI = 0.954, TLI = 0.965, RMSEA = 0.079 and SRMR = 0.0600. All the items had significant factor loadings with the lowest value of 0.416 and the highest value of 0.963. The item en_so and en_rc showed factor loadings that were less than, but closer to the cut-off value of 0.5. These two items represented firms' engagement in designing environmentally friendly solutions and recycling activities, respectively. As these aspects were supported by the qualitative findings, the items were retained in the model in order to have a better representation of the construct (Hair et al. 2010). The results of the final measurement model for environmental sustainability are shown in Figure 6.8 and Table 6.7.

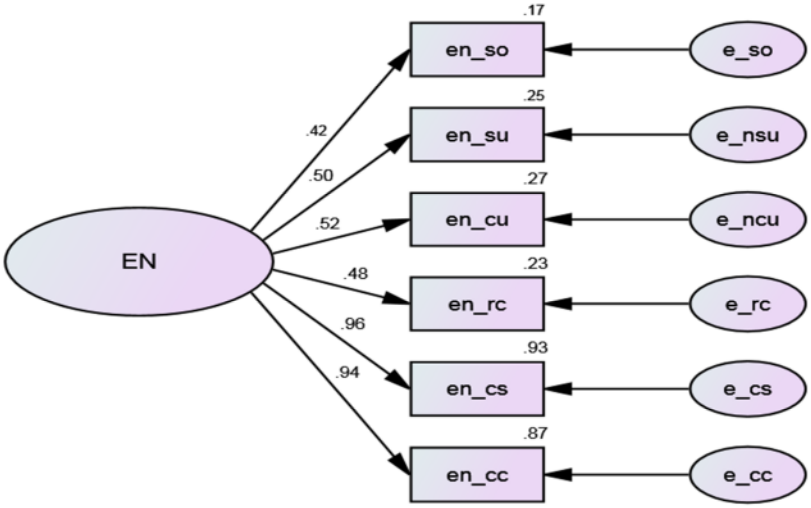

Figure 6.8 Measurement model for environmental sustainability

Table 6.7 Factor analysis of environmental sustainability items

Item		EFA		CFA		
		Loading	Variance explained	SFL	*t*- value	SMC
en_po	Reducing pollution, waste and hazardous materials	0.801	50.963%	Item dropped in CFA		
en_so	Designing environmentally-friendly business solutions	0.751		0.416	4.233*	0.173
en_su	Selecting suppliers based on environmental criteria	0.543		0.499	5.194*	0.249
en_cu	Our firm selects customers based on environmental criteria	0.556		0.517	5.410*	0.267
en_ms	Implementing environmental management systems	0.697		Item dropped in CFA		
en_rc	Engaging in recycling activities	0.667		0.483	5.007*	0.233
en_cs	Cooperating with suppliers in environmental activities	0.844		0.963	12.574*	0.928
en_cc	Cooperating with customers in environmental activities	0.785		0.935	11.759*	0.874
		Eigenvalue = 4.531; KMO =.853; Bartlett's test of sphericity: χ^2 =430.241, p<.001		$\chi^2(9)$ = 14.509, χ^2/df=1.612, p=.105, RMSEA=.079, SRMR=.06,GFI=.954, CFI=.979,TLI=.965		

Note: EFA=Exploratory Factor Analysis; CFA=Confirmatory Factor Analysis; SFL=Standardised Factor Loadings; SMC=Squared Multiple Correlation; KMO=Kaiser-Meyer-Olkin Measure of Sampling Adequacy; RMSEA=Root Mean Square Error of Approximation; SRMR=Standardised Root Mean Square Residual; GFI=Goodness-of-Fit Index; CFI=Comparative Fit Index; TLI=Tucker-Lewis Index; *p<.001

6.5.5 Measurement model for economic sustainability

EFA was conducted with the calibration sample (n = 100) for economic sustainability items. The results showed five correlations less than 0.3 and all the partial correlations were less than 0.7. The KMO test of sampling adequacy was 0.706 with a significant Bartlett's test of sphericity (χ^2 = 286.678, p < 0.001) indicating the suitability of the data for an EFA. The communality table showed the lowest value of 0.194 for the item ec_mk. This item was removed from the sample since items with low communality cannot explain the variance of the construct (Hair et al. 2010). An EFA was again conducted for the sample without ec_mk.

The result showed a KMO test of sampling adequacy of 0.694 and a significant Bartlett's test of sphericity (χ^2 = 261.590, p < 0.001). Once more, three correlations had values less than 0.3 and all the partial coefficients were small (less than 0.7). The minimum communality was 0.477. However, principal axis factoring with direct oblimin rotation revealed two factors extracted with an eigenvalue higher than 1. The

scree plot also indicated two factors as shown in Figure 6.9. The pattern matrix showed that the items ec_pr and ec_ma loaded onto one factor (Factor 1) and the items ec_sa, ec_sh and ec_ro loaded onto another factor (Factor 2).

Factors with fewer than three items do not best fit the data (Costello & Osborne 2005). This causes many issues later at the CFA stage (Kline 2005). Factors with two items are only reliable when the items are highly correlated with each other (greater than 0.7) and fairly uncorrelated with the other items (Yong & Pearce 2013). The two items which loaded onto Factor 1 (ec_pr and ec_ma) showed a correlation of 0.687 between them and moderate correlations with the other items. These results indicated the problematic nature of this two-factor model. Even though the scree plot indicated two points above the curve, this technique is reliable for samples with at least 200 cases (Yong & Pearce 2013). Furthermore, small samples tend to classify items into wrong factors (Costello & Osborne 2005). In addition, factors with two indicators raise convergent issues and result in improper solutions in CFA (Anderson & Gerbing 1988). Considering these facts and the small sample size used in EFA (n =100), the two-factor solution was considered to be less desirable for the economic sustainability construct and the decision was taken to extract factors by setting the number of factors to 1.

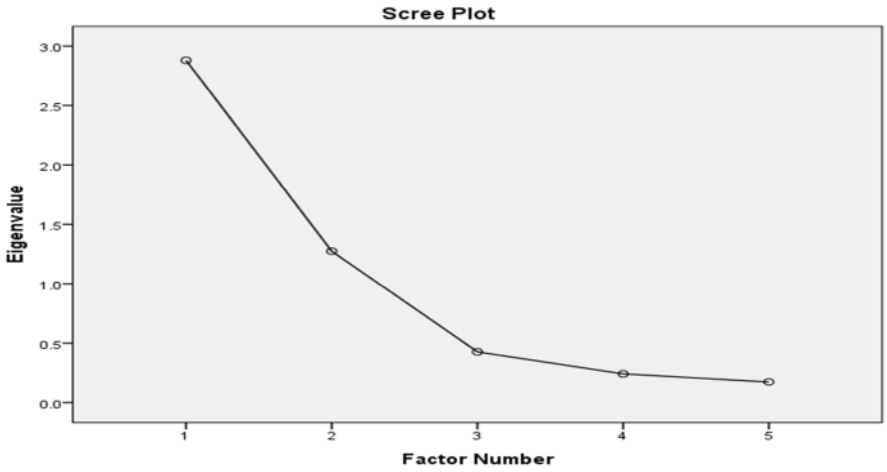

Figure 6.9 Scree plot for economic sustainability

The results of the EFA, in which the number of factors was set to 1, showed low communalities for the items ec_pr (0.163) and ec_mk (0.202). Both these items had lower factor loadings of below 0.4. These items, therefore, can be removed from the analysis. First, the item that had the lowest communality (ec_pr) was deleted and an EFA was performed. This showed a KMO test of sampling adequacy of 0.760. The Bartlett's test of sphericity was significant ($\chi^2 = 213.226$, $p < 0.001$). Two correlations

were below the value of 0.3 and none of the partial coefficients were above 0.7. The communality of ec_mk had been lowered to 0.193 with a factor loading of 0.439. Items with communality values of less than 0.2 are less desirable to explain the variance of the intended construct as such items have a higher unique variance portion than the shared variance (Yong & Pearce 2013). Considering this fact, the item ec_mk was removed.

The resulting EFA indicated only one correlation less than 0.3. All the partial correlations were satisfactory. A KMO test of sampling adequacy value of 0.719 and a significant Bartlett's test of sphericity ($\chi^2 = 194.342$, $p < 0.001$) indicated the sample's adequacy for EFA. The item ec_ma had the lowest communality value (0.291). However, this item was retained as it showed a factor loading of 0.539. Principal axis factoring with direct oblimin rotation showed a one-factor solution that explained 58.855 percent variance of the economic sustainability construct.

The results of EFA were validated with CFA using the second sample (n = 100). The results indicated a poor model fit with χ^2 (2) = 12.543, p = 0.002, Bollen-Stine p = 0.008, χ^2/df = 6.271, CFI = 0.951, GFI = 0.941, TLI = 0.854, RMSEA = 0.231 and SRMR = 0.0473. A modification index of 9.997 suggested an improvement in overall model fit by respecifying the path between the error terms of the items ec_ma and ec_ro. Since the item ec_ma had a lower squared multiple correlation (0.397) below the cut-off point, it was removed from the model.

After removal of the item ec_ma, the economic sustainability construct remained with only three items. As three items cause identification issues (Hair et al. 2010), it was tested with the agility construct as a two-factor model, in order to maintain a sufficient number of items to obtain the model fit statistics (Hair et al. 2010). The agility construct was selected as agility is expected to be correlated with economic sustainability (Swafford, Ghosh & Murthy 2008; Tse et al. 2016; Yusuf et al. 2014a). The results showed a satisfactory model fit with χ^2 (19) = 26.098, p = 0.127, Bollen-Stine p= 0.259, χ^2/df = 1.374, CFI = 0.988, GFI = 0.936, TLI = 0.982, RMSEA = 0.061and SRMR = 0.0488. All the items were loaded significantly with values ranging from 0.761 to 0.941. The factor loading of the economic sustainability is shown in Figure 6.10 and Table 6.8.

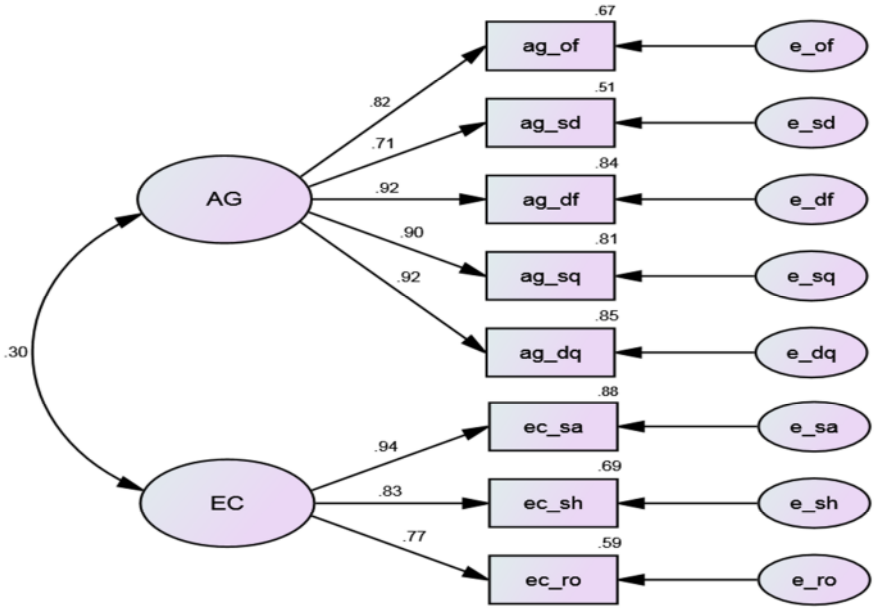

Figure 6.10 Measurement model for economic sustainability

Table 6.8 Factor analysis of economic sustainability items

Item		EFA		CFA		
		Loading	Variance explained	SFL	*t*- value	SMC
ec_ma	Achieved higher profit margins compared to competitors	0.539	58.855%	Item dropped in CFA		
ec_sa	Increased sales	0.918		0.941	11.574*	0.885
ec_sh	Increased market share	0.641		0.829	9.644*	0.688
ec_ro	Improved return on investment	0.900		0.766	8.673*	0.587
		Eigenvalue = 2.687; KMO =.719; Bartlett's test of sphericity: χ^2 =194.342, p<.001		$\chi^2(19) = 26.098$, χ^2/df=1.374, p =.127, RMSEA=.061, SRMR=.049,GFI=.936, CFI=.988,TLI=.982		

Note: EFA=Exploratory Factor Analysis; CFA=Confirmatory Factor Analysis; SFL=Standardised Factor Loadings; SMC=Squared Multiple Correlation; KMO=Kaiser-Meyer-Olkin Measure of Sampling Adequacy; RMSEA=Root Mean Square Error of Approximation; SRMR=Standardised Root Mean Square Residual; GFI=Goodness-of-Fit Index; CFI=Comparative Fit Index; TLI=Tucker-Lewis Index; *p<.001

6.5.6 Full measurement model

After the measurement models for each construct were established, a consolidated measurement model was examined by combining all the constructs into a single CFA model with the full sample of n = 200 (Tanaka 1987).

The data did not fit the model with χ^2 (289) = 584.829, p = 0.000 and Bollen-Stine p = 0.002. The model fit indices with χ^2/df = 2.024, GFI = 0.821 and TLI = 0.898 also indicated a poor model fit, while CFI = 0.917, RMSEA = 0.072 and SRMR = 0.0677 were within the acceptable levels. The modification indices suggested freeing a path between the error terms of the items en_cu and en_su. These two items showed a misfit of 3.119 in the standardised residual covariances. Furthermore, the squared multiple correlations of these items were below the cut-off levels. All these facts indicated that the items en_cu and en_su can be removed from the model. The findings of the qualitative phase showed that even though the firms interviewed selected suppliers based on their environmental performance, they did not consider the environmental sustainability of their customers. Considering this fact, the item en_cu was removed from further analysis.

The subsequent results suggested a poor model fit with χ^2 (265) = 501.669, p = 0.000 and the Bollen-Stine p of 0.002. The other fit indices were χ^2/df = 1.893, GFI = 0.835, TLI = 0.915, CFI=0.925, RMSEA = 0.067 and SRMR = 0.0634, indicating an acceptable model fit. The standardised factor loading of the item en_su was 0.495. This low factor loading was below the acceptable level, reflecting that the item was weak and hence less appealing for measuring the construct (Hair et al. 2010; Jöreskog & Sörbom 1982). The item en_su was, therefore, also removed from the model.

The new model had χ^2 (242) = 445.506, p = 0.000 and Bollen-Stine p = 0.002, indicating a poor model fit. However, the fit indices demonstrated a good model fit with χ^2/df = 1.841, GFI = 0.844, TLI = 0.924, CFI = 0.933, RMSEA = 0.065 and SRMR = 0.0636. All the factor loadings were significant, with the minimum loading of 0.506 for the item en_so. The appropriateness of the χ^2-test to evaluate model fit has been criticised since it leads to model rejections when the data deviate from multivariate normality (Hu, Bentler & Kano 1992; Schumacker & Lomax 2004). The bootstrapping procedure is also associated with limitations in SEM (Byrne 2001). As a result, the indication of a poor model fit from χ^2, p and Bollen-Stine p statistics was questionable.

Researchers have recommended the use of fit indices to evaluate the model fit (Hair et al. 2010; Hu & Bentler 1998). The fit indices considered in this study suggested a good model fit. The evidence of the standardised factor loadings also supported the appropriateness of the items. Considering these facts, this model formed the full measurement model, which is illustrated in Figure 6.11 and Table 6.9.

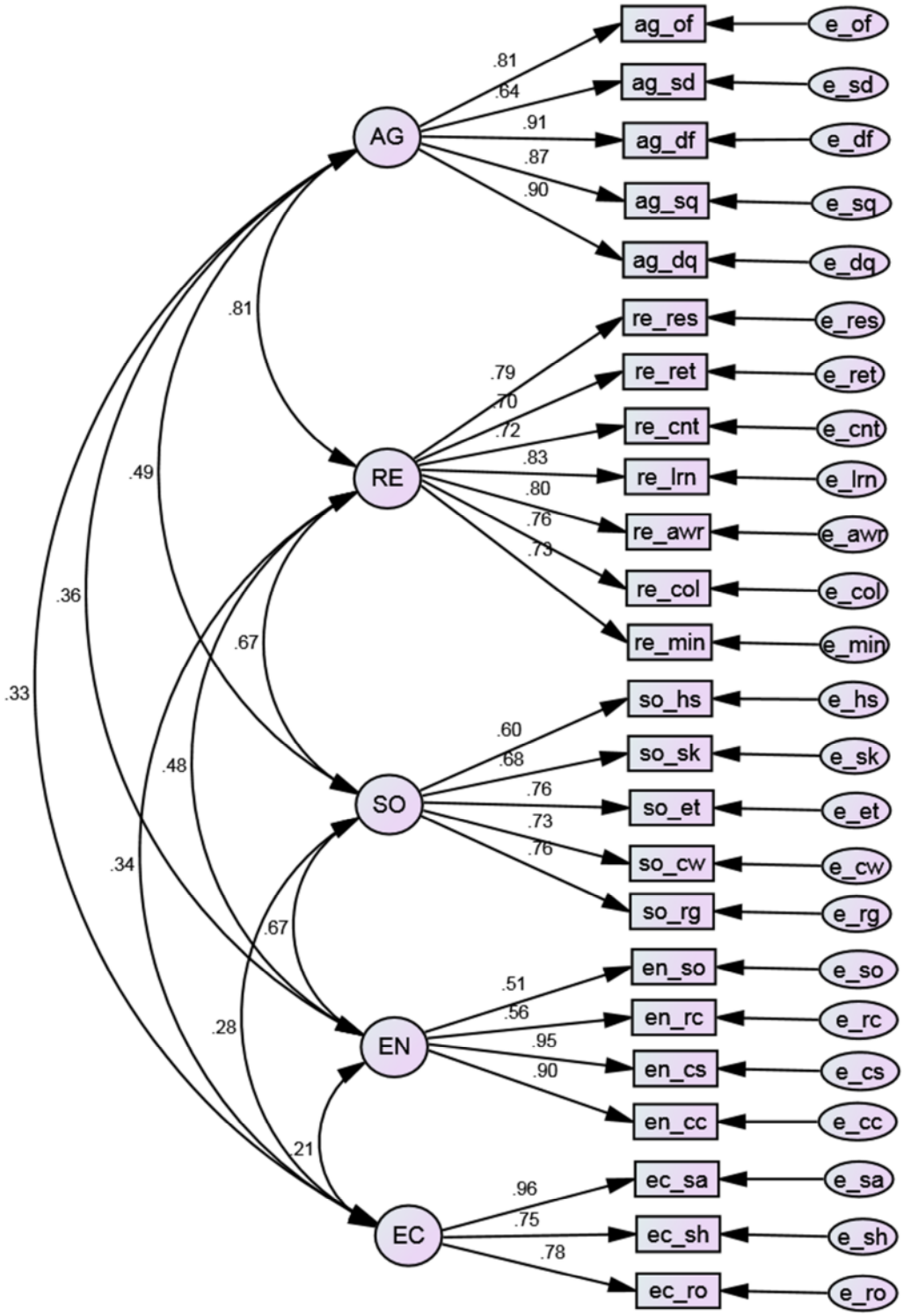

Figure 6.11 Full measurement model

Table 6.9 Results of the full measurement model

Item	Description	SFL	*t*-value	SMC
Agility				
ag_of	Ability to reconfigure supply chain resources in a flexible manner to respond to strategic opportunities or challenges	0.805	a	0.648
ag_sd	Ability to detect changes in supply in a timely manner	0.639	9.655	0.408
ag_df	Ability to reconfigure supply chain resources in a flexible manner to respond to changes in demand	0.908	15.511	0.825
ag_sq	Ability to reconfigure supply chain resources quickly to respond to changes in supply	0.872	14.604	0.760
ag_dq	Ability to reconfigure supply chain resources quickly to respond to changes in demand	0.902	15.352	0.813
Resilience				
re_res	Ability to adequately respond to unexpected changes in the business environment	0.788	a	0.621
re_ret	Returning quickly to its original state after being disturbed by sudden changes	0.702	10.503	0.492
re_cnt	Maintaining a desired level of control over structure and functions of the organisation during sudden changes in the supply chain	0.723	10.890	0.522
re_lrn	Ability to learn from unexpected events in the supply chain	0.830	12.978	0.689
re_awr	Ability to maintain high situational awareness at all times of current and long-term changes in markets	0.799	12.346	0.638
re_col	Collaborating with supply chain partner firms in responding to changes in markets	0.759	11.569	0.576
re_min	Minimising the causes of unexpected changes in markets	0.733	11.087	0.538
Social sustainability				
so_hs	Improving occupational health and safety of employees	0.603	a	0.364
so_sk	Developing employee skills	0.685	7.618	0.469
so_et	Practising ethical business conduct in business transactions	0.757	8.152	0.574
so_cw	Supporting welfare and betterment of wider community	0.726	7.931	0.527
so_rg	Ensuring rights of employees	0.760	8.169	0.577
Environmental sustainability				
en_so	Designing environmentally friendly business solutions	0.506	a	0.256
en_rc	Engaging in recycling activities	0.561	6.048	0.314
en_cs	Cooperating with suppliers in environmental activities	0.950	7.733	0.903
en_cc	Cooperating with customers in environmental activities	0.902	7.671	0.813
Economic sustainability				
ec_sa	Increased sales	0.961	a	0.923
ec_sh	Increased market share	0.754	12.355	0.569
ec_ro	Improved return on investment	0.781	12.907	0.609
$\chi^2(242) = 445.506$, $\chi^2/df=1.841$, $p = .000$, RMSEA=.065, SRMR=.0636,GFI=.844, CFI=.933,TLI=.924				

Note: EFA=Exploratory Factor Analysis; CFA=Confirmatory Factor Analysis; SFL=Standardised Factor Loadings; SMC=Squared Multiple Correlation; KMO=Kaiser-Meyer-Olkin Measure of Sampling Adequacy; RMSEA=Root Mean Square Error of Approximation; SRMR=Standardised Root Mean Square Residual; GFI=Goodness-of-Fit Index; CFI=Comparative Fit Index; TLI = Tucker-Lewis Index; *p<.001; a=loadings were set to unity to scale the latent variable

6.6 Assessment of the measurement model

Once the items were confirmed, they were tested for their ability to represent the respective construct and their ability to distinguish between the items of the different constructs. These items were assessed using reliability and validity tests. Confirming the reliability and validity of the measurement model is important prior to testing the structural model as it affects the results at the structural analysis stage (Blunch 2013). Common method bias was examined using statistical procedures. Also, the presence of any measurement variance that could arise due to different respondent groups was examined.

6.6.1 Reliability

The reliability of the measures remaining in the final model was examined through Cronbach's alpha and composite reliability values. Cronbach's alpha was calculated using SPSS 21. The results showed that all the values were higher than 0.7, which indicated satisfactory levels of reliability (Hair et al. 2010; Nunnally & Bernstein 1994). The composite reliability values were calculated for all the constructs using SEM. These values were also higher than 0.7, and thus indicated desirable levels of item reliability (Hair et al. 2010). These results suggested the consistency of the items that represent the constructs and the reliability in measuring the constructs. The results of the reliability tests are shown in Table 6.10.

Table 6.10 Correlation table

Construct	No. of measures	1	2	3	4	5	Mean	S.D.	Cr. alpha	Composite reliability
1. Agility	5	1					2.808	1.073	0.914	0.883
2. Resilience	7	0.809	1				2.766	0.875	0.905	0.890
3. Social sustainability	5	0.489	0.670	1			2.000	0.771	0.830	0.835
4. Environmental sustainability	4	0.362	0.478	0.671	1		2.503	0.994	0.819	0.778
5. Economic sustainability	3	0.330	0.345	0.280	0.206	1	3.146	1.501	0.866	0.711

Note: Cr. Alpha=Cronbach's alpha; S.D.=Standard deviation

The item reliabilities were further confirmed by the factor loadings. The lowest standardised factor loading of these measures was 0.506. The items with factor loadings higher than 0.7 have more shared variance with the construct than the error variance (Jöreskog & Sörbom 1982). The items with less than 0.5 factor loadings are weak in representing the shared variance, and, therefore, are recommended for removal (Bagozzi

& Yi 1988; Hair et al. 2010). It is, therefore, desirable to retain those items with higher than 0.5 standardised factor loadings in the model (Hair et al. 2010). The lowest standardised factor loading value, therefore, confirmed the reliability of the items.

The high correlation between the two constructs, agility and resilience (0.809), indicates possible multicollinearity between them (Hair et al. 2010). This suggests the possibility of considering them as a single construct. To examine the effect of multicollinearity, a new construct was formulated by combining the measurement items of agility and resilience. The full measurement model was tested with this new construct while removing the previous separate constructs of agility and resilience. Thus, the constructs in the new measurement model were agility-resilience (the combined construct), social sustainability, environmental sustainability and economic sustainability. This new model resulted in χ^2 (246) = 618.107, p = 0.000, Bollen-Stine p = 0.002, χ^2/df = 2.513, GFI = 0.768, TLI = 0.863, CFI = 0.878, RMSEA = 0.087 and SRMR = 0.0715, suggesting a poor model fit. Since the measurement model that treats agility and resilience as separate constructs reflected a better model fit than the new model, agility and resilience were left as separate constructs.

This separation has been justified in the studies which theoretically distinguished agility and resilience in supply chains (e.g., Carvalho, Azevedo & Cruz-Machado 2012; Carvalho, Duarte & Cruz-Machado 2011; Wieland 2013). According to Carvalho, Azevedo and Cruz-Machado (2012) and Carvalho, Duarte and Cruz-Machado (2011), an agile supply chain focuses on rapid response to market changes, whereas a resilient supply chain aims at an efficient response to disruptions. Wieland (2013) proposed that agility is present when the supply chain has a low likelihood of risk with high impact, while resilience was suggested to be present when both the likelihood and the impact of risk are high.

6.6.2 Validity

Convergent validity was supported by an examination of the average variance extracted (AVE) for each construct. AVE represents the amount of item variation explained by the construct. It is calculated by dividing the total of all squared factor loadings by the number of items (Hair et al. 2010) using Eq. 2 presented in Section 4.4.5.2.4. A sample calculation of AVE for agility is shown in Table 6.11.

Table 6.11 Sample calculation of AVE for agility

Item	L_i	L_i^2
ag_of	0.805	0.648
ag_sd	0.639	0.408
ag_df	0.908	0.824
ag_sq	0.872	0.760
ag_dq	0.902	0.814
ΣL_1^2		3.455
AVE		0.691

The AVE of the constructs were 0.691 (agility), 0.582 (resilience), 0.502 (social sustainability), 0.571 (environmental sustainability) and 0.701 (economic sustainability). All the AVE values were above 0.5. These values indicated that most of the item variations were explained by the latent factor structures (Bagozzi & Yi 1988; Fornell & Larcker 1981). The convergent validity of the constructs was, therefore, confirmed.

Discriminant validity was observed by comparing the AVE value of a construct with the squared correlations of the remaining constructs. The AVE for each construct that exceeds the squared correlations associated with the remaining constructs indicates that the latent construct can explain more of the variances in its items than it shares with another construct (Fornell & Larcker 1981). The AVE values and the squared correlations are presented in Table 6.12. AVE values are highlighted in bold along the diagonal and the squared correlations, which are shown below the diagonal.

Table 6.12 Convergent and discriminant validity

	Agility	Resilience	Social sustainability	Environmental sustainability	Economic sustainability
Agility	**0.691**				
Resilience	0.654	**0.582**			
Social sustainability	0.239	0.449	**0.502**		
Environmental sustainability	0.131	0.228	0.450	**0.571**	
Economic sustainability	0.109	0.119	0.078	0.042	**0.701**

Table 6.12 shows that the constructs social sustainability, environmental sustainability and economic sustainability had AVE values higher than the squared correlations. Discriminant validity of those constructs was, therefore, confirmed. However, resilience had a higher squared correlation with agility than its AVE. These results suggest a possible discriminant validity issue between agility and resilience.

To further confirm the discriminant validity, a nested model comparison method using CFA was carried out as suggested by Bagozzi and Yi (1988). A series of nested CFA models was compared by constraining the covariance between each pair of constructs (one pair at a time) to 1. Discriminant validity is present if the χ^2 difference test is significant between the models in which the constructs were freely estimated and constrained to 1 (Bagozzi & Yi 1988). Table 6.13 shows the results of the nested CFA model comparisons. All the models have significant χ^2 differences, indicating the presence of discriminant validity of the items. These results confirmed that discriminant validity is not an issue in this study.

Table 6.13 Nested model comparisons for discriminant validity

Correlation constrained to unity	χ^2 value	$\Delta\chi^2$	*p*
Agility–Resilience	455.330	*df*(1) = 9.825	0.002*
Agility–Social sustainability	493.291	*df*(1) = 47.786	0.000*
Agility–Environmental sustainability	497.288	*df*(1) = 51.783	0.000*
Agility–Economic sustainability	452.862	*df*(1) = 7.357	0.007*
Resilience–Social sustainability	502.316	*df*(1) = 56.811	0.000*
Resilience–Environmental sustainability	509.322	*df*(1) = 63.817	0.000*
Resilience–Economic sustainability	462.695	*df*(1) = 17.189	0.000*
Social sustainability–Environmental sustainability	513.008	*df*(1) = 67.503	0.000*
Social sustainability–Economic sustainability	482.617	*df*(1) = 37.111	0.000*
Environmental sustainability–Economic sustainability	484.703	*df*(1) = 39.197	0.000*

Note: $\Delta\chi^2 = \chi^2$ difference with the unconstrained model, p = Significance of the χ^2 difference, $*p < 0.01$

6.6.3 Common method bias

Common method bias was statistically tested with Harman's single-factor test (Podsakoff et al. 2003) in addition to the actions taken to avoid or minimise the method bias as explained in Section 4.4.5.2.5 on p. 111. This test can be performed either with EFA or CFA. The EFA based model showed more than one factor with the eigenvalues greater than 1. These factors accounted for 69.59 percent of the total variance, while the first factor accounts for 35.75 percent of the total variance. Furthermore, the CFA, based on Harmon's single factor test in which all the manifest variables were modelled as the indicators of a single factor, demonstrated a poor model fit with χ^2 (252) = 1405.009, $p = 0.000$, $\chi^2/df = 5.575$, GFI = 0.575, TLI = 0.587, CFI=0.623, RMSEA = 0.152 and SRMR = 0.1165. The poor model fit indicated the absence of common method bias. All these results confirmed that common method bias is not an issue in this study.

6.6.4 Measurement invariance

The measurement model was tested for measurement invariance to examine whether the validity of the items is equivalent across different groups in the population (Cheung & Rensvold 2002; Hair et al. 2010). First, the configural invariance was verified by testing the measurement model for individual groups separately. Then, the measurement models of all the groups were analysed simultaneously. This model is called a baseline model and is used for comparison when testing for metric invariance.

Next, in order to determine the metric invariance, two models were compared as constrained and unconstrained models (Byrne 2001; Kline 2010). In the constrained model, factor loadings, variances, covariances and error variances were set to be equal across groups. In the unconstrained model, all the parameters were freely estimated, suggesting that the constrained model is nested in the unconstrained model. Even though the χ^2 difference test can be examined for the nested models (Byrne 2001), its suitability for invariance decisions has been questioned (Byrne 2010; Kline 2010); thus, a better approach is the assessment of the differences in CFI values of the constrained and unconstrained models (Cheung & Rensvold 2002). The difference in CFI values is not dependent on the model complexity or the sample size. The difference in CFI values also does not correlate with the overall fit measures. Both the χ^2 difference and CFI differences were evaluated in this study. Three separate analyses were conducted for measurement invariance. The sample was subdivided and analysed using a) manufacturing and service firms; b) small and medium sized firms and large firms; and c) foreign-owned and Australian-owned firms.

6.6.4.1 Manufacturing and service firms

The agile, resilient and sustainability practices can vary among manufacturing and service firms. Chiarini (2014) found that there were differences in implementing green practices between manufacturing and service firms in Europe; the service sector firms were drawn from logistics, warehouse, retail, healthcare, finance, education and other supporting service industries. Therefore, it is important to examine the validity of the items across manufacturing and service firms.

In this study, the sample represents firms from manufacturing (32%); transport, postal and warehousing (23%); mining (8%); retailers (6.5%); electricity, gas, water and waste services (6.5%); professional, scientific and technical services (5.5%); wholesalers

(4%); agriculture, forestry and fishing (4%); information, media and telecommunications (3%); construction (2.5%); health care and social assistance (1%) and rental, hiring and real estate services (0.5%). These firms were classified into manufacturing and service groups.

Model fit indices for the two baseline models of configural invariance for the groups based on the type of operations were as follows: For the manufacturing group, the fit indices were χ^2 (242) = 355.181, p = 0.000, Bollen-Stine p = 0.495, χ^2/df = 1.468, GFI = 0.679, TLI = 0.884, CFI = 0.898, RMSEA = 0.0860 and SRMR = 0.0822. For the service group, the fit indices were χ^2 (242) = 385.155, p = 0.000, Bollen-Stine p = 0.074, χ^2/df = 1.592, GFI = 0.814, TLI = 0.919, CFI = 0.929, RMSEA = 0.066 and SRMR = 0.0726. The model fit of the manufacturing group is only marginally acceptable. These less favourable values in the manufacturing group model might be due to the small sample size (n = 64), which is below the recommended size for a CFA analysis (Anderson & Gerbing 1984). For the service group, even though the SRMR value is slightly above the cut-off value, the other indices indicated a well-fitting model. Then, the two groups were analysed simultaneously. The model fit indices were χ^2 (484) = 741.339, p = 0.000, Bollen-Stine p = 0.234, χ^2/df = 1.532, GFI = 0.765, TLI = 0.906, CFI = 0.918, RMSEA = 0.052 and SRMSR = 0.0822, indicating an acceptable model fit. All these results verified the configural invariance of the measurement model for both the manufacturing and service groups.

Next, the metric invariance was tested by comparing the constrained model, in which the factor loadings are equal across groups, while in the unconstrained model, the factor loadings are freely estimated among groups. The χ^2 values and CFI values of the unconstrained and the constrained models are shown in Table 6.14.

Table 6.14 χ^2 values of the constrained and unconstrained models for metric invariance for respondents from manufacturing and service firms

Model	χ^2	*df*	CFI
Unconstrained	741.339	484	0.918
Constrained model	757.646	503	0.919

The χ^2 difference was 16.307 for a change of 19 in the degrees of freedom. The associated *p* value of this change is 0.637. This non-significant difference in the change in χ^2 indicated that the two models are the same. This reflected that the measurement weights are equal across the two groups. CFI difference of -0.001 also confirmed the similarity of the measurement items across the firms belonging to the manufacturing and service groups. These measurement invariance results suggested that the manufacturing and service firms can be analysed together.

6.6.4.2 Small, medium and large firms

Large firms may have more resources to implement supply chain activities (Zhao et al. 2011). As a result, they are better able to implement agile, resilient and sustainable practices in supply chains. Large firms also tend to address corporate responsibility issues more proactively than smaller firms (Elsayed 2006; Perrini, Russo & Tencati 2007). Furthermore, it has been proven that firm size affects the extent of sustainable supply chain practices (Pagell et al. 2004; Zhu et al. 2008). Therefore, it is vital to examine the validity of the items across different sizes of the organisations.

The configural and metric invariances were tested for the groups of firms based on firm size. This study applied the classification of the Australian Bureau of Statistics (ABS) for firm size. According to this classification, firm size is determined by the number of employees. Firms are classified following the ABS guidelines into small, medium and large. The model for small-sized firms resulted in a negative error variance, which indicated concerns about the reliability of the results (Hair et al. 2010). This situation can arise due to the small sample size of the groups that represent small and medium-sized firms (n = 46 and n = 48 respectively) (Blunch 2013).

To remedy the situation, the groups of small and medium-sized firms were combined together for the analysis. The model fit statistics for the configural invariance of the multi-group analyses based on firm size are shown in Table 6.15. The results of the baseline model, which is called the totally free (TF) model, are also presented in the same table.

Table 6.15 Results of configural invariance for the sample based on firm size

	Size (based on no. of employees)		
	Small and medium-sized < 200 (n = 94)	Large >=200 (n = 106)	TF
χ^2	443.353	391.701	835.116
df	242	242	484
p	0	0	0
χ^2/df	1.832	1.619	1.725
CFI	0.882	0.905	0.893
GFI	0.742	0.775	0.759
TLI	0.865	0.891	0.878
RMSEA	0.095	0.077	0.061
SRMR	0.076	0.085	0.088

For the group with small and medium-sized firms, χ^2/df values indicated a well-fitting model, even though all the other indices, such as the CFI, GFI, TLI, RMSEA and SRMR values, deviated from their acceptable values. These variations might have been due to the small size of this group. The measurement model that represented large firms and also the TF model demonstrated an acceptable model fit. These results verified the configural invariance of the measurement model for the groups based on firm size.

The results of the metric invariance tests for the groups based on firm size are set out in Table 6.16. It reports the differences in χ^2, *df* and CFI values of the constrained model compared with the baseline model (unconstrained) and also the *p* value associated with the change in χ^2 value.

Table 6.16 Results of metric invariance based on firm size

	$\Delta\chi^2$	Δdf	*p*	ΔCFI
Firm size	40.238	19	0.003	- 0.007

Table 6.16 shows that the models based on firm size exhibited significant $\Delta\chi^2$ at $p < 0.01$, thus suggesting an absence of invariance, whereas less than -0.01 of ΔCFI indicated the presence of measurement invariance (Cheung & Rensvold 2002). Since χ^2 difference test is problematic for small samples, the invariance decision was taken based on the ΔCFI here (Byrne 2010; Kline 2010). Since the ΔCFI was less than -0.01, the measurement invariance of groups based on firm size was confirmed.

6.6.4.3 Foreign-owned and Australian-owned firms

As some managers of foreign-owned firms stated in the interviews, they were influenced by their parent firms and were sometimes restricted to the sustainability practices they could implement in Australia. Considering this fact, the validity of measurement items across firms based on the ownership was tested.

The sample consists of Australian-owned (64%) and foreign-owned (36%) firms. A firm is classified as Australian-owned if it originated and is controlled by the management in Australia. A firm is a foreign-owned if it is governed by an overseas parent firm.

The model fit statistics for the configural invariance of the multi-group analyses based on the ownership are shown in Table 6.17. The results of the baseline model, which is called the TF model, are also shown in the table.

Table 6.17 Results of configural invariance based on ownership

	Ownership		
	Australian (n = 128)	**Foreign (n = 72)**	**TF**
χ^2	42.559	323.258	746.165
df	242	242	484
p	0	0	0
χ^2/df	1.746	1.336	1.542
CFI	0.909	0.930	0.917
GFI	0.796	0.741	0.775
TLI	0.897	0.920	0.905
RMSEA	0.077	0.067	0.052
SRMR	0.081	0.079	0.081

In relation to firm ownership, all the baseline group models, as well as the simultaneous group analysis of the groups, had acceptable model fits. These results confirmed the configural invariance of the measurement model for the groups based on ownership.

The results of the metric invariance tests for the group-based ownership are set out in Table 6.18. It reports the differences in the χ^2, *df* and CFI values of the constrained model compared with the baseline model (unconstrained) and also the *p* value associated with the change in χ^2 value.

Table 6.18 Results of metric invariance based on ownership

	$\Delta\chi^2$	Δdf	p	ΔCFI
Ownership	22.846	19	0.244	- 0.001

The constrained model based on ownership had non-significant $\Delta\chi^2$ at $p < 0.01$ and the ΔCFI was also less than -0.01 with the baseline unconstrained model. The results, therefore, suggested measurement invariance across groups based on ownership.

All these results confirmed the measurement invariance across different types of groups in the population which shows that neither firm size, type of operations or ownership affects the results of the quantitative analysis.

6.7 Structural model and hypotheses testing

After verifying the validity, reliability and measurement invariance, the paths in the structural model were tested. The analysis of the structural model resulted in χ^2 (242) = 445.506, p = 0.000 and the Bollen-Stine p = 0.002. The other indices were: χ^2/df = 1.841, CFI = 0.933, GFI = 0.844, TLI = 0.924, RMSEA = 0.065 and SRMSR = 0.0636. As the fit indices were within the acceptable range, this structural model represented a good fitting model.

These fit indices and the parameter estimates obtained from the structural model were similar to the results of the full measurement model. A recursive structural model is less likely to have a better fit value than the full measurement model, as the structural models are nested within the full measurement model (Hair et al. 2010). A closer examination of the paths in the structural model demonstrated that both the full measurement model and the structural model contained similar paths. The structural model of this study, therefore, represented the saturated model. Even though saturated structural models are less preferable due to their incapability of revealing more than the full measurement model (Hair et al. 2010), the saturated structural model was accepted in this study because the theoretical model of interest (as established in Chapter 3) is similar to the saturated model. The structural model for this study is shown in Figure 6.12.

R^2 value indicates the extent to which the model explains the variance in a construct (Hair et al. 2010). R^2 values of the model revealed that the current model explained 65.4 percent of variance in resilience, 61.3 percent variance of social sustainability, 23.1

percent variance of environmental sustainability and 13.2 percent variance of economic sustainability. The R^2 values of the endogenous constructs also reflect the explanatory power or the nomological validity of the model (Hair et al. 2010).

The results showed only four significant structural paths as shown in Figure 6.13. The standardised β coefficients of the path estimates along with the p values and the respective hypotheses are summarised in Table 6.19.

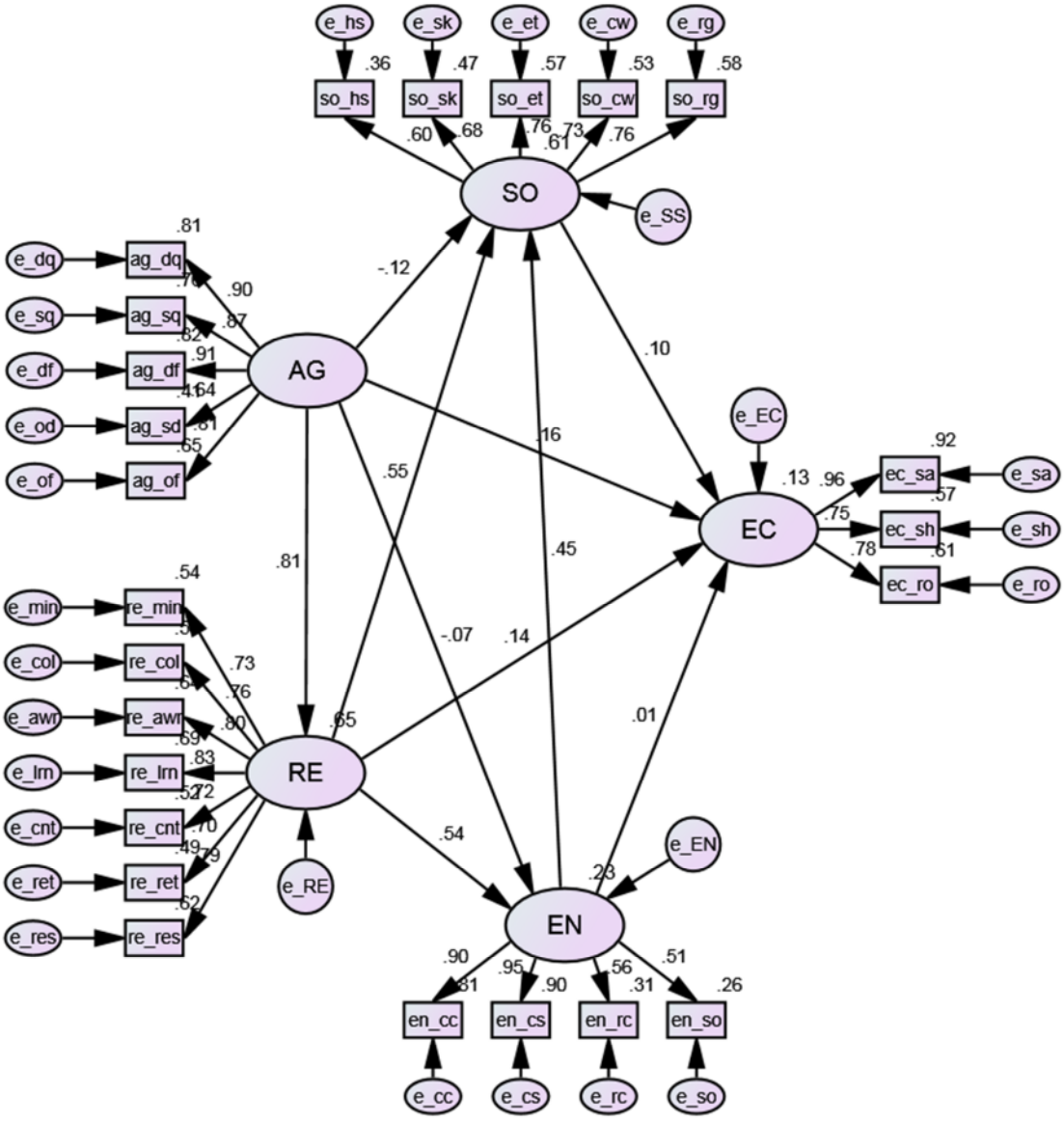

Figure 6.12 Structural model

The results showed that resilience has a positive effect on the social sustainability of firms in the study ($\beta = 0.551$, $t = 4.026$, $p < 0.001$). Resilience also positively influences the environmental sustainability for firms ($\beta = 0.538$, $t = 3.525$, $p < 0.001$). However, resilience showed no significant impact on the economic sustainability of the firms

(β = 0.142, t = 0.807, p = 0.420). The results confirmed that agility has a significant positive relationship with resilience (β = 0.809, t = 10. 283, p < 0.001), suggesting that agility is an enabler of a firm's resilience in the sample. In addition, the environmental sustainability of firms has a positive relationship with social sustainability (β = 0.451, t = 4.611, p < 0.001). Contrary to the predicted positive association of agility with the sustainability dimensions, none of the relationships were significant in the structural model (agility → social sustainability: β = -0.120, t = -1.054, p = 0.292; agility → environmental sustainability: β = -0.073, t = -0.550, p = 0.582); agility → economic sustainability: β = 0.163, t = 1.156, p = 0.248). Similarly, neither social nor environmental sustainability showed significant influences on economic sustainability (social → economic sustainability β = 0.096, t = 0.684, p = 0.494; environmental → economic sustainability β = 0.015, t = 0.140, p = 0.889).

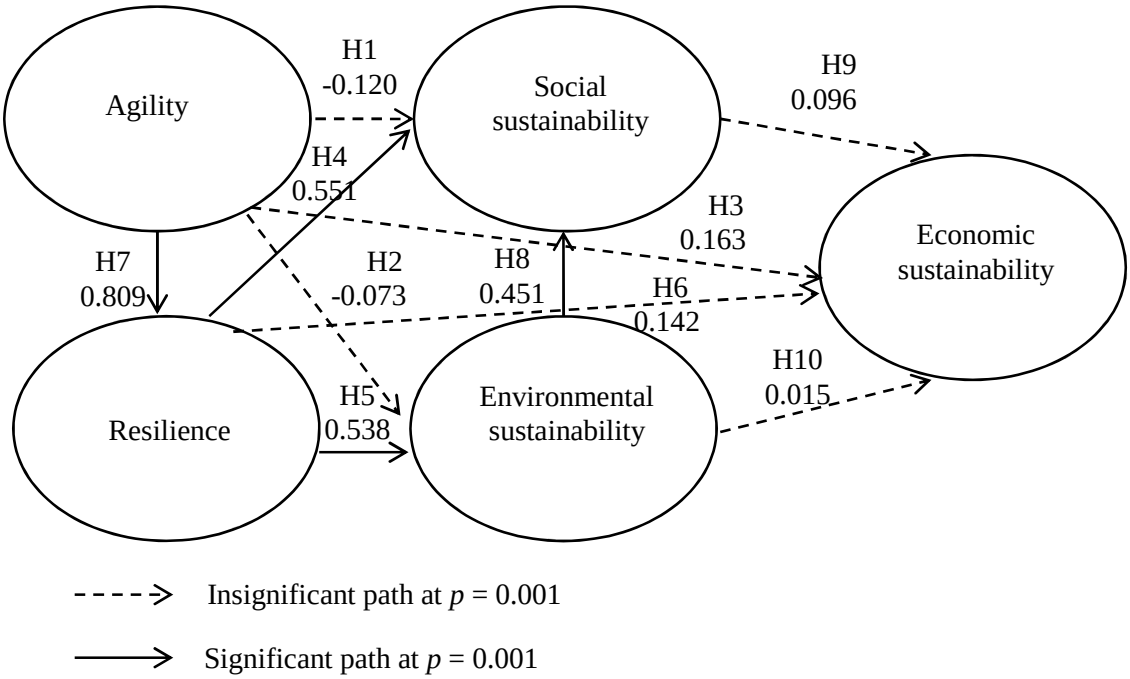

Figure 6.13 Structural model with estimated path coefficients and hypotheses

Table 6.19 Results of the structural analysis

Hypotheses	Path	Std. β	p value	Results
H1	Agility → Social sustainability	-0.120	0.292	Not supported
H2	Agility → Environmental sustainability	-0.073	0.582	Not supported
H3	Agility → Economic sustainability	0.163	0.248	Not supported
H4	Resilience → Social sustainability	0.551	<0.001	Supported
H5	Resilience → Environmental sustainability	0.538	<0.001	Supported
H6	Resilience → Economic sustainability	0.142	0.420	Not supported
H7	Agility → Resilience	0.809	<0.001	Supported
H8	Environmental sustainability → Social sustainability	0.451	<0.001	Supported
H9	Social sustainability → Economic sustainability	0.096	0.494	Not supported
H10	Environmental sustainability → Economic sustainability	0.015	0.889	Not supported

6.8 Post-hoc analysis

As stated by Wu and Zumbo (2008), a reason for non-significant causal relationships and the weak relationships could be a hidden moderation effect. The overall causal effect will become non-significant when the effect holds only for a group of the sample. On this basis, the effect of firm size on the structural model was tested as large firms are in a better position to implement agile, resilient and sustainability practices, as stated in Section 6.6.4.2. The moderating effect of the firm size, therefore, was examined using multi-group analysis.

Establishing measurement (metric) invariance is an essential prerequisite for cross-group comparisons in moderation (Hair et al. 2010; Vandenberg & Lance 2000). Then, the structural model was assessed as both an unconstrained model and constrained model (Byrne 2001; Hair et al. 2010). In the unconstrained model, the path estimates are freely estimated between the groups whereas the paths are constrained to be equivalent between the groups in constrained model. A moderating effect is present if there is a significant change in chi-square with a change in the degrees of freedom between the two models (Hair et al. 2010).

The measurement invariance for firm size has been established in Section 6.6.4.2. The structural model was assessed for unconstrained and constrained models. For the unconstrained model: χ^2 (503) = 875.354, p = 0.000, χ^2/df =1.740, CFI = 0.886, RMSEA = 0.061 and SRMR = 0.0769. For the constrained model: χ^2 (513) = 886.384, p = 0.000, χ^2/df = 1.728, CFI = 0.886, RMSEA = 0.061 and SRMR = 0.0897. The χ^2 difference was 11.03 with a change of 10 in degrees of freedom. The associated p value of this change is 0.355. The difference between the CFI values was also zero. This non-

significant difference in the change in χ^2 and the CFI value indicate that the path estimates are similar between the groups. Therefore, the firm size did not affect the paths in the structural model.

Mediation analyses were performed to test the mediating role of social sustainability on the relationships between agility and economic sustainability and between resilience and economic sustainability. The mediating role of environmental sustainability on the relationships between agility and economic sustainability; between resilience and social sustainability, and between resilience and economic sustainability was also examined. Furthermore, the mediation effect of resilience on the relationships between agility and social sustainability and between agility and environmental sustainability was tested. The bootstrapping method was applied to test these mediation effects. This method has been shown to have superior performance in mediation testing, since it precludes the assumption of normality of data (Cheung & Lau 2008; Preacher & Hayes 2008). Furthermore, it reduces the likelihood of parameter bias arising from omitted mediators (Preacher & Hayes 2008). The bootstrapping method calculates the indirect effects between independent and dependent variables. These indirect effects are then tested for their significance using confidence intervals to infer mediation. The mediation hypothesis is rejected if the confidence intervals of indirect effect contain zero (Cheung & Lau 2008).

In the structural model, the variables social sustainability and environmental sustainability mediate the relationships between independent and dependent variables in multiple paths. The indirect effects of all these possible paths were individually and collectively considered. The confidence intervals were calculated for both individual and total indirect effects. Only a single path is present for the mediation role of environmental sustainability between resilience and social sustainability. Similarly, resilience mediates the relationships between agility and social sustainability, and between agility and environmental sustainability in a single path. For these mediations, only the indirect effects of the individual paths were considered. Results of the bootstrapping analysis are presented in Table 6.20.

Table 6.20 Bootstrapping results for mediation

Structural path	Effect	95% Confidence interval
A: Mediation role of social sustainability between agility and economic sustainability		
AG → SO → EC	-0.016	[-0.140, 0.023]
AG → RE → SO → EC	0.061	[-0.110, 0.258]
AG → EN → SO → EC	-0.005	[-0.059, 0.013]
AG → RE → EN → SO → EC	0.027	[-0.042, 0.120]
Total indirect effect	**0.067**	**[-0.110, 0.281]**
B: Mediation role of social sustainability between resilience and economic sustainability		
RE → SO → EC	0.098	[-0.177, 0.410]
RE → EN → SO → EC	0.043	[-0.066, 0.193]
Total indirect effect	**0.141**	**[-0.256, 0.566]**
C: Mediation role of environmental sustainability between agility and economic sustainability		
AG → EN → EC	-0.002	[-0.065, 0.033]
AG → RE → EN → EC	0.009	[-0.134, 0.145]
AG → RE → EN → SO → EC	0.027	[-0.042, 0.120]
Total indirect effect	**0.034**	**[-0.052, 0.123]**
D: Mediation role of environmental sustainability between resilience and economic sustainability		
RE → EN → EC	0.015	[-0.212, 0.242]
RE → EN → SO → EC	0.043	[-0.066, 0.193]
Total indirect effect	**0.058**	**[-0.106, 0.227]**
E: Mediation role of environmental sustainability between resilience and social sustainability		
RE → EN → SO	**0.150**	**[0.067, 0.300]**
F: Mediation role of resilience between agility and social sustainability		
AG → RE → SO	**0.211**	**[0.090, 0.427]**
G: Mediation role of resilience between agility and environmental sustainability		
AG → RE → EN	**0.437**	**[0.198, 0.740]**

AG=Agility; RE=Resilience; SO=Social sustainability; EN=Environmental sustainability; EC=Economic sustainability; *$p < .001$

For the mediation analyses E, F and G indirect paths between independent and dependent variables were significant at $p < 0.001$. These results confirmed that resilience exerts a mediating effect on the relationships between agility and social sustainability and also between agility and environmental sustainability. Furthermore, the results supported that the environmental sustainability mediates the path from resilience to social sustainability.

For the other mediation analyses (A, B, C and D), the results indicated that none of the indirect paths between independent and dependent variables was significant at $p < 0.001$ since the confidence intervals for the indirect effects contained zero. These mediation hypotheses were, therefore, not supported. The results suggested that social sustainability neither mediated the relationship between agility and economic sustainability, nor the relationship between resilience and economic sustainability. The findings also failed to confirm the mediation effect of environmental sustainability on the relationships between agility and economic sustainability, and between resilience and economic sustainability.

6.9 Chapter summary

This chapter presented the quantitative analysis of the survey results. First, it detailed the procedures adapted to clean the survey results to convert them to a sample on which SEM analysis could be performed. A two-stage approach to SEM was applied in this study. Accordingly, the measurement model was established before estimating the parameters in the structural model. Both exploratory and confirmatory analyses were performed in determining measurement items for the constructs.

The results of the structural model were used to test the hypotheses of the study. The results confirmed four hypotheses (H4, H5, H7 and H8) at $p < 0.001$. The results of the analysis indicated no support for the direct relationships posited by the hypotheses related to agility (H1, H2 and H3) and economic sustainability (H3, H6, H9 and H10).

The findings suggested that resilience is positively associated with the social and environmental sustainability of the firms. The findings further inferred a positive effect of agility on resilience. In addition, the environmental sustainability of the firms significantly influenced social sustainability. The mediation analyses suggested that resilience mediates the relationship between agility and social sustainability. Resilience also mediates the relationship between agility and environmental sustainability. The results also supported that environmental sustainability mediates the relationship between resilience and social sustainability. This study, therefore, confirmed the impacts of agility and resilience on the sustainability of the firms in manufacturing supply chains in Australia. The next chapter will discuss these results in detail.

7 Discussion

7.1 Introduction

The aim of this research is to examine the influence of supply chain agility and resilience on sustainability in supply chains in the manufacturing sector (see Section 1.4 in Chapter 1). This examination is important since sustainable supply chains require dynamic capabilities represented by the agility and resilience (see Section 2.3.4 in Chapter 2). To achieve this objective, three research questions were set (see Section 3.4 in Chapter 3) and examined using a mixed methods approach (see Section 4.2 in Chapter 4). The qualitative phase revealed the attributes of supply chain agility, resilience and sustainability practices of the firms in the Australian manufacturing sector to answer research questions 1 and 2 as presented in Chapter 5. These findings were also used to verify the items used to measure constructs in the quantitative phase. Chapter 6 reported the results of the quantitative phase which investigated the impacts of agility and resilience on the three dimensions of sustainability (social, environmental and economic) in firms in the supply chain in the Australian manufacturing sector. This was to answer research question 3. This reporting included an explanation of the treatment of data in the sample to establish the measurement models for factor analyses and hypotheses testing. Following this, the chapter presented the results of the structural analysis.

This chapter discusses the findings regarding the impacts of supply chain agility and resilience on the sustainability of firms in manufacturing supply chains in Australia. The findings highlight that while supply chain agility did not have any impact on the sustainability dimensions, resilience positively impacted on both social and environmental sustainability, but not on economic sustainability. The results also suggest that supply chain agility enables resilience and that the environmental practices established in supply chains subsequently lead them to embark on social sustainability

initiatives. The following section discusses these results and supports them with examples from the qualitative study and relevant literature, where applicable.

7.2 Agility and resilience

The findings show that supply chain agility has a positive influence on resilience. This result empirically confirms the literature, which emphasised that supply chain agility enables resilience (Carvalho, Azevedo & Cruz-Machado 2012; Christopher & Peck 2004; Nils-Ole et al. 2015; Tukamuhabwa et al. 2015; Wieland & Wallenburg 2013). The findings of the qualitative phase also support this view, showing that firms access information about changes and receive support from supplier and customer firms to respond to disruptions (see Section 5.4.2). Furthermore, the interviews revealed that many manufacturing firms respond quickly to supply and market changes to prevent any disruption those changes may cause to their operations (see Section 5.3.1). Agility, therefore, generates valuable resources for supply chains that help withstand changing market conditions. The integrated processes and collaborations between firms with supply chain agility enable market awareness and supply chain reconfiguration in responding to disruptions (Christopher & Peck 2004; Jüttner & Maklan 2011; Shao 2013).

Firms with supply chain agility are characterised by formal and informal communications between partners, which allow them to keep abreast with industry and market changes using a variety of information sources (Gligor & Holcomb 2012b; Yang 2014). Such information also includes changes that are likely to disrupt business operations and thereby allow firms to be proactive. When disruptions occur, the communication mechanisms in firms with supply chain agility can be used to exchange information about the incidents. The inter-firm transactions already established in supply chain agility foster collaborations during disruptions (Leana & Van Buren 1999; Scholten & Schilder 2015). In this way, agility generates valuable resources in supply chains and harnesses collaborative behaviour to build resilience. The qualitative study also supports this view. Some managers stated that maintaining relationships with customers, suppliers, business partners and industry associations enabled them to secure information about the changes, both formally and informally (see Section 5.3.2). Because of the early warnings received through these relationships, these firms could minimise disruptions to their operations. The interviews also provided evidence of some

manufacturing firms leveraging the collaborative relationships they built with suppliers and customers to overcome disruptions (see Section 5.4.2).

In addition, to be resilient, supply chains need rapid reconfiguration to secure resources in order to restore the supply chain during disruptions (Christopher & Peck 2004; Nils-Ole et al. 2015; Wieland & Wallenburg 2013). Agility provides the competency to reconfigure supply chains to address demand and supply changes. As revealed in the qualitative phase of this study, agile firms influence supply chain partners to adjust operations and switch between partner firms in order to meet customer demands (see Section 5.3.3). This competency to adjust resources enables supply chains to quickly reconfigure during disruptions.

The flexibility associated with agility also enables resilience (Ivanov, Sokolov & Dolgui 2014; Nils-Ole et al. 2015). As found in the qualitative study, a number of manufacturing firms modify their production schedules, inventory and material sources to respond to demand and supply changes (see Section 5.3.4); this process is considered a form of contingency planning employed in order to respond to disruptions. Some of the firms interviewed have restructured operations by anticipating the changes in the business environment (see Section 5.3.4); thus reflecting the flexibility to long-term changes and enhancing resilience.

Another explanation for the relationship between agility and resilience is market responsiveness. Meeting customer requirements is a significant factor of agility (Gligor & Holcomb 2012a; Yauch 2011; Yusuf et al. 2014a). The interviews revealed that firms with supply chain agility are likely to keep buffer resources (such as safety stocks or using alternative logistics providers or backup production plants) at various points in their supply chains in order to enable faster delivery to markets (see Section 5.3.3). This distribution of resources within the supply chain can be critical given the vast geographical distances in Australia, which affect distribution, as well as the demand for multiple access points for customers, and several processing facilities in manufacturing supply chains. These geographically dispersed buffer resources enable supply chains to successfully overcome disruptions without encumbering their operations.

The strategies employed in being agile in response to current market changes can lead to improved resilience. Australian manufacturing supply chains attempt to deliver high value-added solutions for niche markets (Hermens 2014). This approach helps to

prevent any future loss of customers causing operational disruptions. Therefore, supply chains that adjust their strategies in order to respond to current market conditions will be able to minimise future long-term disruptions.

The findings are also in line with the dynamic capability view and social capital theory. Agility generates competencies that provide valuable physical assets (such as flexible operations and information exchange mechanisms) and relational assets (such as trust and commitment to work in partnerships) that enable supply chains to be resilient. These competencies in agility that assist firms in mobilising and renewing resources can be utilised in proactively managing and responding to market disruptions, and consequently, to be resilient. The results also highlight that the relational assets in agility (such as trust), which reflect the social capital, assist in obtaining the commitment of supply chain partners and accessing the required resources to restore the supply chains during disruptions. This finding shows that agility plays a significant role in enabling resilience.

7.3 Resilience and social sustainability

The structural analysis shows a positive relationship between resilience and social sustainability. This finding suggests that the firms in the sample that possess the abilities to prepare and respond to disruptions and recover from disruptions can improve social sustainability practices in their supply chains. The qualitative study also provides evidence that a number of manufacturing firms that prevent disruptions and reduce risks caused by social issues implement social sustainability practices in their supply chains (see Section 5.4.3).

Social issues have the potential to disrupt operations (Klassen & Vereecke 2012; Mani, Agrawal & Sharma 2015). Employees working under unsafe working conditions are likely to incur more workplace accidents, and those with poor labour practices are likely to create labour disputes which disrupt operations at various points in supply chains (Foerstl et al. 2010; Hoejmose, Roehrich & Grosvold 2014; Mani et al. 2016). Hence, the proactive behaviour of firms (being resilient) enhances social sustainability.

Resilience also improves social sustainability in supply chains by proactively minimising risks of reputational damage. As firms in Australian manufacturing supply chains constantly interact with a variety of upstream and downstream partners, both

domestic and overseas (Office of the Chief Economist 2015; Trading Economics 2016), they are likely to be recognised and criticised by the wider community if unfavourable social sustainability practices are present in their supply chain partner firms. To minimise these risks and remain resilient, firms ensure ethical and socially responsible practices in the supply chain. They establish selection criteria or codes of conduct that provide the rules or norms for social sustainability practices for supply chain partners. This was also observed in the interviews where firms that prevent unnecessary disruptions have examined the labour relations and the conduct of their supply chain partners. For example, it was found that a number of manufacturers in the qualitative study were resilient in maintaining ethically sourced materials and rejecting suppliers in countries known to be using child or forced labour (see Section 5.5.4.1). This was to maintain not only their brand image but also operational stability in the supply chain.

Resilience also includes foreseeing stakeholders' requirements and requiring changes to processes and collaborative efforts among supply chain partners (Gualandris, Golini & Kalchschmidt 2014; Klassen & Vereecke 2012; Krause, Handfield & Tyler 2007). These efforts would reduce impediments or disruptions while improving social sustainability in the supply chain. For example, in an interview with a food processing firm, the manager reported that they negotiated and collaborated with farmers to implement livestock traceability systems, in anticipation that retailers and customers would demand such a system in future, bringing the potential to disrupt supplies (see Section 5.4.3).

The findings also support the dynamic capability view and social capital theory. Resilience represents capabilities that enable firms to proactively manage disruptions, minimise the impacts of disruptions, respond to disruptions and recover from disruptions. Resilience also leads firms to develop inter-firm relationships among supply chain partners, which can develop social capital for firms. The findings contribute to the literature by showing that both dynamic capability and social capital of firms, developed through resilience, lead to social sustainability in supply chains.

These findings contribute to the understanding of the impact of resilience on social sustainability. Resilient firms enhance social sustainability in supply chains by being proactive to risks in order to minimise disruptions. Collaborative efforts in resilient

firms further facilitate the implementation of social sustainability initiatives in supply chains.

7.4 Resilience and environmental sustainability

The findings show that resilience has a positive influence on environmental sustainability. This result highlights that the firms prepare, respond and recover from supply chain disruptions to improve environmental sustainability practices in their supply chains. This finding is congruent with studies showing that firms which proactively deal with operational disruptions, address the environmental sustainability needs of the stakeholders (Hsu et al. 2013; Sarkis, Gonzalez-Torre & Adenso-Diaz 2010). The qualitative study also shows that a number of firms were proactive in meeting Environment Protection Authority (EPA) requirements (e.g., waste reduction) (see Section 5.6.2). This in turn, leads them to being more environmentally sustainable.

Resilience delivers the ability to foresee long-term issues and prepare the supply chain for such disruptions. This long-term orientation of resilience is also supportive of environmental initiatives as the environmental activities incur high investment costs with long-term returns (Yusuf et al. 2013; Zhu, Sarkis & Lai 2013). This study's qualitative phase also provides evidence in line with this view (see Section 5.4.3). For example, a food processing firm that understood the potential disruptions to the future food supply chains caused by the unavailability of suitable lands introduced a farming system that prevents soil degradation to reduce environmental damages.

Another potential reason why supply chain resilience improves environmental sustainability might be attributed to the operational disruptions caused by supply chain partner firms. Poor environmental performance in supply chain partner firms could disrupt the whole supply chain by causing reputational damage and create shortages of resources (Koplin, Seuring & Mesterharm 2007). As the firms in manufacturing supply chains in Australia interact with partner firms in various geographical locations, supply chains are exposed to a larger number of non-government organisations (NGOs) and environmental activist groups. This enhanced visibility to protestors increases the possibility of being criticised if partners fail to meet environmental standards.

Furthermore, supply chains that pre-empt changing market trends are more likely to strengthen environmentally sustainable practices. Many Australian manufacturing

supply chains are dependent on natural resources at some stage of their operations. Since the depletion of natural resources could disrupt their operations, many firms research alternative materials and processes to ensure the efficient use of resources (Mylan et al. 2015; Zhu, Sarkis & Lai 2012). The qualitative findings also support this view to preserve the environment by minimising the use of natural resources (see Section 5.6.2); moreover, some firms invest in product designs that reduce material consumption and increase recyclability and energy efficiency (see Section 5.6.1.2). This consideration reflects environmentally friendly innovations for the future and long-term viability of their operations. The ability of firms in resilient supply chains to recognise and prepare for these changes enables them to make major changes to their business operations and benefit from such activities.

Resilience results in environmental sustainability improvements through the process of recovery from disruptions. Supply chains that have been subjected to criticism because of poor environmental practices have taken actions to develop procedures to demonstrate their chain-wide commitment to the environment (Gimenez & Tachizawa 2012). The collaborative efforts utilised during the recovery process reinforce trust and relationships among supply chain partners (Johnson, Elliott & Drake 2013; Jüttner & Maklan 2011; Scholten & Schilder 2015). These strengthened relationships facilitate goal congruence to implement environmental sustainability initiatives (Kogg & Mont 2012; Liu, Srai & Evans 2016).

The findings are also in line with the dynamic capability view and social capital theory. This is because resilience incorporates organisational processes that identify potential disruptions, share information, allocate resources in supply chains to respond to disruptions and flexibly adjust operations. The strong inter-firm relationships strengthen trust, willingness and the ability to define common goals and work collectively. Supply chain resilience, therefore, enables processes, ensures goal congruence and allows firms to engage in environmental activities.

The results extend the understanding of the impact of resilience on sustainability. Firms prevent and overcome disruptions in supply chains to achieve environmental sustainability. This proactive engagement in minimising the causes of disruptions encourages firms to implement environmental practices in line with stakeholder requirements and for environmental challenges. Furthermore, recovery from

environmental sustainability-related issues also causes improvements in environmental practices along the supply chain. Resilient firms have long-term orientation and inter-firm relationships which are conducive to implementing environmental practices.

7.5 Environmental sustainability and social sustainability

The findings demonstrate that environmental sustainability has a positive relationship with social sustainability. This implies that a supply chain's engagement in initiatives to protect the environment stimulates socially sustainable activities, such as safe working conditions, product safety, less damaged environment for communities and future generations and collaborations in social sustainability practices in supply chains. The qualitative phase also supports this finding by showing that some manufacturing firms interviewed improved employee working conditions and public safety through environmental practices (see Section 5.6.2). This result is in line with the literature in firms' environmental activities enhancing their social sustainability performance (Govindan et al. 2014). While past studies have been conducted on manufacturers only, this study provides a broader perspective by collecting data from firms at all stages in the supply chain. The findings, therefore, offer a more comprehensive contribution to the field of sustainable supply chains.

Environmentally sustainable supply chains consist of firms that adopt programmes to reduce waste, air emissions and pollution and protect the environment. These activities lead to safe working conditions, support better employee health and assure a conducive environment for the community in the vicinity (Gimenez, Sierra & Rodon 2012). Another explanation is that firms aim for long-term social benefits through environmental practices. Consequently, the environmental sustainability engagements of firms contribute towards enhancing social sustainability.

Another explanation for the positive association between environmental and social sustainability could be the focus on recycling activities in manufacturing supply chains. Recycling activities encourage reusing waste resources and collecting products at the end of life. Recycling requires items to be moved upstream in the chain, hence creating the need for reverse logistics. Reverse logistics improve social performance through the generation of new jobs and activities in supply chains (Sarkis, Helms & Hervani 2010). The support for recycling would, therefore, enhance social sustainability while minimising environmental damage. Various Australian states also encourage the

recycling of products (National Sustainability Council 2013). The improved recyclability of products generates employment opportunities at these recycling centres.

Furthermore, environmental sustainability is a cooperative engagement among supply chain partner firms, involving activities that include eco-design and green procurement. These cooperative engagements also indicate the socially sustainable conduct of firms. As found in the qualitative phase, some firms encouraged their suppliers to operate sustainably (see Section 5.6.1.1). The cooperative efforts and assessments of environmental sustainability in supply chains highlight their contribution to the betterment of the current and potential supply chain partners.

The results of this study show that the practices associated with enhancing environmental sustainability in supply chains also contribute to improving social sustainability in those supply chains. The outcomes of environmental practices as well as engagement in those activities reflect and support socially sustainable practices.

7.6 Mediation effects

The findings of this study support the mediating role of resilience on the relationship between agility and social sustainability. It also confirms that resilience mediates the relationship between agility and environmental sustainability. These findings suggest that agility impacts on social and environmental sustainability by enabling resilience. The organisational and managerial processes that identify changes detect sustainability requirements of the stakeholders early. Firms that minimise the causes leading to disruptions in their supply chains see the potential of these requirements to disrupt their operations. The ability of agility to provide timely response enables firms to proactively address those sustainability requirements. Also, responsiveness associated with agility allows firms to quickly overcome operational failures caused by sustainability-related issues, thus leading to strengthened sustainability practices in supply chains. Furthermore, the social capital developed in agility, such as trust and commitment among supply chain partners, supports collectively taken preventive or reactive actions to address sustainability requirements.

The findings also show that environmental sustainability mediates the relationship between resilience and social sustainability and that resilience positively impacts on social sustainability. This implies that firms in the sample that possess the abilities to

prepare, respond and recover from disruptions implement social and environmental sustainability practices. These environmental practices also facilitate social sustainability by providing social wellbeing and reflecting firms' socially sustainable conduct.

7.7 Trade-offs for sustainability

The findings of this study did not support a positive relationship between social and environmental sustainability with the economic sustainability of the firms in the sample. The result, however, is similar to the findings of Yusuf et al. (2013), who reported that there was no direct impact of social and environmental sustainability on profits, market share or return on investments of the oil and gas supply chains in the United Kingdom. The result is also consistent with the study by Torugsa, O'Donohue and Hecker (2013) who noticed that there was no direct association of social and environmental practices with the financial performance of small and medium-sized firms in the Australian machinery and equipment manufacturing industry.

Such a result could be attributed to the high investments associated with environmental and social sustainability initiatives. Implementing environmental and social sustainability practices incurs initial capital outlays and the benefits are generally reaped in the long term (Yusuf et al. 2013; Zhu, Sarkis & Lai 2013). For instance, investments in renewable energy technologies, energy-efficient and less polluting machinery, more effective material handling equipment, greener transport vehicles and environmentally friendly buildings incur massive capital outlays. This fact is supported by the qualitative phase, where the managers of the firms that had invested in waste reduction technologies, energy-efficient machinery and fleets had mentioned that these initiatives were costly. Some managers stated that these activities had affected their profits, but anticipated to receive economic benefits in the long term (see Section 5.8). According to the 2014 report by the Australian Industry Group (regarding an annual survey of Australian Chief Executive Officers), complying with the *Fair Work Act 2009* in terms of industrial relations and workplace health and safety has increased the cost of operations and impeded business performance and growth (Office of the Chief Economist 2015). Some managers also mentioned that social sustainability practices had increased their cost of operations and affected profits (see Section 5.8). Since this study collected data on all three variables (social, environmental and economic

sustainability) in the same time period, it is likely that the economic sustainability variable captured only the increasing costs. The economic benefits that accrue over the period through sustainability initiatives may not be reflected in the data. Consequently, the results do not show improvements in economic sustainability arising from social and environmental sustainability.

Overall, the findings suggest how agility and resilience affect the sustainability of firms in the supply chain in the Australian manufacturing sector. With the agile capabilities, firms receive information about market changes and improve resilience by perceiving the risks associated with changes. Firms that minimise these risks and prevent disruptions caused by sustainability-related factors embark on sustainability initiatives. The firms' ability to reconfigure supply chain resources enables them to respond to disruptions and to recover from disruptions. Response and recovery from disruptions caused by sustainability issues lead to sustainability enhancements in supply chains. The inter-firm relationships in agility improve resilience by encouraging collaborations during disruptions, which in turn, develops the social capital required to implement sustainability practices in supply chains. Accordingly, resilience affects the social and environmental sustainability of firms in supply chains directly in minimising supply chain disruptions and responding and recovering from disruptions, whereas agility enhances resilience by improving the abilities to recognise risks and to reconfigure supply chain resources.

7.8 Chapter summary

This chapter discussed the results of the quantitative analyses, supported by the examples from the qualitative study and from the literature. The chapter addressed the research question set out in Chapter 1 regarding how agility and resilience affect the sustainability of firms in the supply chain in the Australian manufacturing sector.

The chapter discussed the hypotheses that were statistically significant in Chapter 6. These hypotheses showed that supply chain agility positively affects resilience, and resilience positively affects social and environmental sustainability. The hypotheses relating to economic sustainability were not supported. The chapter also discussed the trade-offs among sustainability dimensions. Based on these findings, the next chapter presents the conclusions of the study by detailing theoretical and practical implications and presenting the limitations and future research directions.

8 Conclusions and recommendations

8.1 Introduction

The preceding chapter provided a discussion of the quantitative results, supported by the examples from the qualitative study and from the literature. The central research question of this study was: How do agility and resilience affect the sustainability of firms in the supply chain in the Australian manufacturing sector? This chapter presents the conclusions of the study regarding this central question with the theoretical and practical contributions, followed by the limitations of the study and scope for future research.

8.2 Theoretical implications

This study contributes to the area of sustainable supply chain management. Based on the dynamic capability view and social capital theory, the findings suggest that agility and resilience are organisational capabilities that identify market changes and reconfigure resources, which in turn, create the social capital to develop sustainable practices in supply chains.

The results further provide an empirical basis that supports Carter and Rogers' (2008) theoretical proposition regarding agility and resilience mitigating supply chain risk and thereby facilitating sustainable supply chains. The findings extend their research by demonstrating that supply chain agility and resilience are dynamic capabilities that foster sustainability through social capital.

The qualitative findings, in particular, supported that both agility and resilience involve processes of identifying and responding to changes through resource reconfiguration that enabled firms to acquire more desirable market positions. These features corroborate with the dynamic capabilities defined by Teece, Pisano and Shuen (1997).

The results, therefore, support the works of Beske (2012) and Beske, Land and Seuring (2014), who affirmed the need for dynamic capabilities for sustainable supply chains.

The study also extends the social capital theory (Coleman 1988; Putnam 1993), which asserts that relationships build resources for actors in networks. The reinforcement between dynamic capabilities and inter-firm relationships develops trust and obligations for firms to act responsibly. These strong ties also develop congruence among firms in supply chains to foster sustainability. Building on social capital, the study advances how dynamic capabilities generate social capital among supply chain firms to support sustainability. This supports the study of Vasileiou and Morris (2006), which suggested that social capital among supply chain partners were important to implementing sustainability practices in supply chains.

The findings confirmed the relationship between agility and resilience by highlighting supply chain agility as an enabler of resilience. This result adds to the understanding of sustainable supply chain development as a stage-wise process that stems from agility, which can then subsequently enable resilience. Firms in agile supply chains can sense market changes and respond quickly in order to maximise opportunities. Since they exploit market opportunities to satisfy customers, this characteristic prompts them to detect and prepare for potential threats in advance. Furthermore, they adjust their operations to meet short-term changes in demand and supply. This flexibility in supply chains is important to respond to demand and supply changes encountered during disruptions. The inter-firm processes that enable agility provide access to resources and social capital for collaborative efforts during the recovery process.

Consequently, agility provides a strong foundation for resilience by supporting both proactive and reactive actions to disruptions. The results, therefore, highlight how the capabilities required for short-term market changes (agility) enable a sustainable business in the long term. The quantitative empirical findings support the current literature emphasising the relevance of agility for resilience (Christopher & Peck 2004; Jüttner & Maklan 2011). Furthermore, the findings also support the research by Scholten, Scott and Fynes (2014), who state that agility is important in executing prepared plans during disruptions and for immediate response as it provides supply chain flexibility, velocity and visibility. The results also confirm the findings of Purvis et al. (2016), who empirically (in a qualitative research setting) demonstrated that agility

leads to resilience by enabling firms to sense and respond to disruptions arising from downstream. Hence, this study establishes that agility leads to resilience.

Researchers have defined resilience as preparing, responding and recovering from damages (Melnyk et al. 2014; Nils-Ole et al. 2015; Ponomarov & Holcomb 2009). These actions enable supply chains to withstand disruptions and overcome damages quickly. However, to be truly resilient, it is important to remove the causes that lead to the disruptions. This study incorporates this aspect of resilience and suggests that resilient supply chains identify and respond to both slow and long-term changes. In that sense, firms develop alternative arrangements to minimise the causes leading to disruptions.

Additionally, this study examines the impact of supply chain resilience on sustainability. Past studies on supply chain resilience have mostly concentrated on *developing resilient supply chains and identifying the antecedents and components* (e.g., Pettit, Fiksel & Croxton 2010; Wieland & Wallenburg 2013), *exploring the resilient supply chain concept* (e.g., Ponis & Koronis 2012; Ponomarov & Holcomb 2009), *comparing it with other types of supply chains* (e.g., Carvalho, Duarte & Cruz-Machado 2011; Wieland 2013) and *developing assessment tools for supply chain resilience* (e.g., Pettit, Croxton & Fiksel 2013; Spiegler, Naim & Wikner 2012). This study provides an understanding of the impact of resilience on sustainability dimensions by identifying resilience characteristics that are dynamic in nature and by showing how they develop social capital in the supply chain.

This study extends the research on attaining sustainability in manufacturing supply chains in uncertain markets. Drawing from the information obtained from manufacturing supply chains in Australia, the study offers empirical evidence for the roles of agility and resilience as dynamic capabilities enabling sustainable supply chains. Furthermore, it shows that the social capital accumulated in firms through these dynamic capabilities facilitates sustainability improvements in supply chains.

8.3 Practical implications

Supply chain managers and other associated parties in manufacturing supply chains can use the findings of this study to identify practices for managing supply chains. This

section, therefore, provides practical implications for managers, industry associations and for the public sector.

8.3.1 For managers

8.3.1.1 To improve agility

The results of the study can assist supply chain managers in planning how to achieve sustainability in supply chains. In particular, they should understand the role of being agile and resilient in their sustainability journey. The starting point is to raise their awareness of market changes. To facilitate that, firms should adopt mechanisms to support information flows between supply chain partner firms. Such information transfers contribute to sustainability by increasing visibility, improving decision-making and streamlining transport and logistics functions. These information transfers can be executed through integrated information systems or having regular discussions with supply chain partners.

Managers should also encourage the exchange of vital information about the strategic actions of their supply chain partners. The exchange of such critical information would be possible through developing close relationships with partner firms and personal networks with the people in the industry. This would enhance managers' ability to anticipate and prepare for future market changes.

The significance of informal communication channels should not be disregarded in improving information exchange in supply chains. This option would be attractive since the majority of firms that operate in Australia are small and medium-sized and because the investments in technology-intensive information integration methods would be too costly for them. Informal communication can be supported by relationships with supply chain partners. Managers should, therefore, focus on developing interpersonal relationships with the people they interact with in other firms in the supply chain during the transactions. The participation in industry forums also allows firms to explore opportunities, build social relations and strengthen relationships with supply chain partners. Such events uncover information about industry trends that is unlikely to be transmitted through formal channels.

8.3.1.2 To improve resilience

The establishment and strengthening of inter-firm relationships improve the control and monitoring of activities in the supply chain and can thereby prevent disruptions. The inter-firm relationships can be developed by entering into contractual agreements and having regular meetings with partner firms. Developing long-term relationships and keeping abreast of partner firms' activities will enable the partners to detect anomalies at an early stage and minimise operational disruptions. Additionally, the relationships will help to improve flexibility in supply chains.

As supply chain managers have responsibility for developing business solutions and to proactively drive change, flexibility is important when operating in dynamic and unpredictable environments. While a degree of uncertainty is involved with constantly aligning supply chain resources, structures and processes to accommodate common goals and overcome disruptions, the objective is to produce a more effective and sustainable supply chain.

Supply chain managers need to learn how to strategically deal with sustainability risks. They should assess the sustainability risk associated with organisational processes, business transactions and managerial decisions. Firms should proactively prevent risks rather than minimise the impact of risks. Managers can establish criteria for selecting supply chain partners. Since sustainability-related risks can come from extended supply chains, managers should assess the risks involved in longer supply chains and encourage first-tier supply chain partners to control their upstream and downstream firms. In addition, they can work with supply chain partners to improve their partners' sustainability performance. This can be done by raising the awareness of supply chain partners about the importance of and the impact of their operations on sustainability, offering training programmes and providing incentives to encourage supply chain partners to initiate sustainability practices.

While strengthening the ability to prevent risk, managers should develop resilient capabilities to withstand disruptions. This can be done by improving flexibility and keeping buffer resources, particularly in critical stages in the supply chain. In doing that, they should analyse their supply chains and identify critical paths for their operations. Managers can utilise collaborative and cooperative approaches with supply chain partners to strengthen resources along these critical paths. For example, they can request

supply chain partners that have high-risk levels for disruptions to keep buffer resources, while they can also add flexibility into the contracts entered with supply chain partners by having terms to cover a range of item quantities and prices.

Managers should collaborate not only with their supply chain partners, but also with other stakeholders (such as government departments and agencies, competitors, industry associations and firms in other industries) to respond to market changes, to recover from disruptions and to develop sustainability practices in supply chains. They can share information about market changes, possible disruptions and jointly develop plans to address changes and improve sustainability. The collaborations would provide access to tangible (technology) and non-tangible (information and trust) resources instrumental in improving agility, resilience and sustainability. While strengthening the ability to adapt quickly to changes such as regulations, material shortages, transport delays and crisis situations, it would also reduce the risk of supply chains encountering disruptions due to sustainability-related issues.

8.3.1.3 To improve sustainability

In implementing sustainability practices, managers can adopt frameworks such as the Global Reporting Initiative (GRI) G4 guidelines or the United Nations (UN) Global Compact principles. These guidelines provide a sound basis for identifying and implementing sustainability initiatives (GRI 2015; UN Global Compact 2016). Furthermore, Organisation for Economic Co-operation and Development (OECD) guidelines for multinational enterprises also offer valuable advice on enhancing enterprise sustainability and on developing sustainable supply chains for specific industries such as agriculture, minerals, and textiles and garments (OECD 2016). Both the Australian Investment and Securities Commission and Australian Securities Exchange have mandated for firms registered on their lists to disclose sustainability risks (Franklin 2015); therefore, adopting frameworks such as GRI or UN Global Compact is beneficial for managers to improve sustainability in a systematic manner. Small and medium-sized firms can follow these guidelines to improve sustainability in their supply chains.

When implementing sustainability practices, the managers can begin with internal social and environmental practices and then move to sustainability in supply chains. The activities could include developing codes of conduct, governing partner activities and

formulating assessment criteria to monitor the sustainability impacts and risks of supply chain partners on operations. While continuously adjusting firms' operations, managers can educate employees and work with supply chain partners to share knowledge and collaborate to improve the sustainability of partners.

In implementing sustainability practices in supply chains, managers need to understand the impact of operations in the supply chain on social, environmental and economic sustainability. They should consider this from the perspective of the whole supply chain and assess the impact of activities at different stages such as procurement, wholesale, logistics and retail. They could provide leadership or best practices in demonstrating social and environmental responsibility through the purchase of products and services that have lower adverse impacts during production, use or disposal.

Managers should consider sustainability initiatives as long-term activities. These initiatives incorporate trade-offs (Hahn et al. 2010). In particular, when firms move further up from low hanging fruit activities, they need to redesign supply chains and develop new business models (Devinney 2009). Studies have shown that sustainability activities provide long-term financial benefits for firms (Orlitzky, Schmidt & Rynes 2003; Tate, Ellram & Kirchoff 2010). Managers who focus only on the short-term may perceive sustainability as unprofitable (Wu & Pagell 2011). Therefore, managers should analyse the long-term impact of sustainability activities to be more strategic. For example, when investing in sustainable technologies which require substantial cash outlays, they should look at the financial benefits accrued with emission reduction, waste minimisation, material utilisation, and energy saving over the long term.

Through these initiatives, managers can increase their awareness about changes that impact their operations and develop proactive and reactive capabilities to address those changes. These actions, in turn, help them to collaborate for sustainability initiatives in supply chains. In this manner, they can meet the Federal Government's objective of improving agility and resilience of businesses (Hendy 2016; Somerville 2016) and achieve sustainability in supply chains.

8.3.2 For industry associations

The findings of this study provide recommendations for various industry associations that involve manufacturing supply chains. First, the industry associations can facilitate

the improvement of supply chain agility of their member firms by providing meaningful market information to their members. By predicting and analysing long-term impacts to businesses, the associations can assist firms to plan appropriate strategies. This information can be disseminated through their bulletins, e-mails or websites. Also, they can arrange seminars and workshops to keep their members informed.

Currently, most of the industry associations focus on operational improvement within the particular industry. For instance, the Association of Manufacturing Excellence provides training programmes, workshops and educational materials for productivity improvement and lean manufacturing (Association for Manufacturing Excellence 2016). The core activities of the Australian Industry Group are workplace relations, occupational health and safety, workers' compensation, and skills and business development (The Australian Industry Group 2016). The Australian Retailers Association provides human resource development and networking opportunities for their members (Australian Retailers Association 2016). Industry associations can also share the significance of agility, resilience and sustainability from a supply chain perspective with their members. They can help members to develop these capabilities through the programmes they offer. For example, training programmes and educational materials could incorporate modules that stress the significance of agility, resilience and sustainability for supply chains, and the relationship of these three elements to long-term business success.

Supply chains in manufacturing industries comprise a wide range of industries, such as agriculture, mining, construction, manufacturing, retailers, wholesalers, logistics and transport providers and electricity producers. The professional associations of these industries can collectively work to identify how each industry can contribute to enhancing agility and resilience. They can also identify the high-risk points in supply chains in terms of the operations that are more likely to be disrupted by climate changes, natural disasters and social or environmental-related factors. These details can then be passed on to their members.

Since agility and resilience are associated with sustainability as capabilities that foster collective actions towards sustainability, it is important for the industry associations to encourage firms to collaborate with supply chain partners. They can encourage firms to build relationships with supply chain partners and learn from other firms. This can be

done by proposing mechanisms and providing opportunities for members to interact with members of other industries and stakeholders, such as government authorities.

Associations such as the Plastics and Chemicals Industries Association and the Australian Steel Institute have programmes that encourage sustainability in supply chains (Australian Steel Institute 2016; The Plastics and Chemicals Industries Association 2011). For example, the Sustainability Leadership Framework of the Plastics and Chemicals Industries Association provides essential tools and resources to integrate sustainability into supply chains. However, not all industry associations have demonstrated active participation in improving the sustainability of their supply chain members. It is, therefore, suggested that industry associations should design programmes with an extended view of sustainable supply chains. This can be done by offering programmes to deliver knowledge on implementing sustainable practices and joint development of sustainable solutions with the support of supply chain partners. Additionally, industry associations can set sustainability targets at the supply chain level.

It is important to encourage all supply chain members to participate in sustainability programmes. For instance, only a few industries are signatories to the National Logistics Safety Code of Practice, which was established to guide responsibility in supply chains to ensure the safety of the carriage of freight (Australian Logistics Council 2013). Industry associations should, therefore, encourage members by highlighting the long-term benefits of sustainability activities and the risks associated with ignoring sustainability aspects.

The sustainability activities currently organised by industry associations appear to focus at the individual firm level. It is, therefore, advisable for associations to broaden their scope to incorporate supply chain activities and operations into their current programmes. Furthermore, attention regarding the social aspects is currently focused on health and safety, hiring a skilled workforce and community activities. The absence of consideration given to managing supply chain partners for social aspects should be addressed in future programmes. The industry associations can incorporate more areas as covered in the GRI G4 and UN Global Compact principles.

8.3.3 For government departments and agencies

Agility and resilience are given high priority in government agendas (Hendy 2016; Somerville 2016). The Federal Government has reformed its regulations to enable businesses to improve flexibility in serving customers (Department of the Prime Minister and Cabinet 2016). Since the long-term viability of a business relies on agility and resilience leading to sustainability (Fiksel, Goodman & Hecht 2014), it is important for the government to examine how regulation changes support environmental and social sustainability.

This study shows that agility and resilience have a positive influence on sustainability. There is a need for government departments and agencies to identify the skills needed by the industry and encourage the capability development programmes that extend beyond economic benefits to enhance sustainability. One example is a government-funded initiative through the Manufacturing Industry Innovation Cooperative Research Centre, which promotes agile and flexible manufacturing (Petreski 2013). The adoption of cleaner production technologies not only increases the efficiency of energy use, resources and manufacturing processes, but also reduces waste, greenhouse gas emissions, health risks and environmental damage. There are government agencies (such as Sustainability Victoria, United Nations Association of Australia, Landcare Australia, Environment Protection Authority and Department of Environment, Climate Change and Water) that could foster awareness programmes and work with the private sector to improve business resilience as a step towards sustainability. This requires the promotion of innovative design, risk management, new technologies and environmental policies that are relevant for business operations in supply chains.

Innovation is an important aspect in developing an agile economy in Australia (Hendy 2016). To foster innovation, the government initiative of the National Innovation and Science Agenda (Department of the Prime Minister and Cabinet 2015) mainly focuses on increasing collaboration with businesses and research institutions to develop new business solutions and processes. It is important that these innovations rely on renewable energies and support recycling and cleaner production.

The government interventions to improve resilience mostly focus on national-level strategies for disasters such as the Critical Infrastructure Resilience Strategy and the National Strategy for Disaster Resilience. The recent publication of the Resilience

Expert Advisory Group was on organisational resilience (Resilience Expert Advisory Group 2016), which provides information about the infrastructure and guidelines for building resilience within an organisation. These initiatives reflect the lack of a supply chain perspective in the current public sector resilience agendas. This study emphasises the importance of supply chain resilience for sustainability. In order to support businesses, the scope of government programmes should be expanded to cover supply chains. For example, the guidelines should reveal how firms should work with their supply chain partners during disruptions and the types of precautionary actions firms should take with the support of supply chain partners to mitigate the impacts. In addition, government agencies can prepare plans separately for individual industries to guide them on how to manage supply chains in the event of a national crisis. Furthermore, in a crisis situation which could affect an entire industry, these agencies can support the continued functioning of supply chains by reducing import and export tariffs and intervene in sourcing until the industry can recover.

Since Australian businesses lag behind in sustainability initiatives, the public sector plays a vital role in helping firms in manufacturing supply chains to improve their sustainability skills. In particular, the Federal Government can enter into partnerships with other countries to transfer sustainability-related knowledge and share sustainable technologies. This is important as most of Australian businesses are small and medium-sized with fewer resources to negotiate individually with firms in other countries.

As highlighted in this study, collaboration with supply chain partners is important to improve agility, resilience and sustainability. The Federal Government can enter into bilateral or free trade agreements with trading partner countries. These agreements reduce tariffs, set trade quotas and support product transfers in a more transparent regulatory environment. The agreements provide opportunities for Australian businesses to access markets and offer opportunities for outsourcing and offshoring supply chain activities. Understandings between trading partners can foster supply chain responsiveness and lead to faster recovery in the event of failure through providing access to many resources. As an example, in the event of a natural disaster, firms can access offshore material supplies or outsource their activities if their facilities are damaged. These arrangements provide opportunities to serve customer markets until firms recover. Such agreements can also facilitate technology and knowledge transfers between countries to improve agility and sustainability.

The findings of this study further emphasise the need for infrastructure plans supportive of agility, resilience and sustainability in the manufacturing industries. The facilities such as road networks, telecommunications and urban planning should provide speedy transfer of freight and information while minimising environmental and social damage. The current Australian infrastructure plan (Infrastructure Australia 2016) accommodates these factors by identifying the main industrial activities of particular regions and planning for relocating firms to improve sustainable operations and responsiveness.

It is vital for governments at both national and state level to further revise their policies to support social and environmental sustainability whilst boosting the economic sustainability of industries. In line with the Federal Government's vision for a cleaner environment, various departments and agencies should invest in providing renewable energy for industries, partnering with private sector firms to support research on sustainability initiatives and ensuring intellectual property rights security for sustainable innovations. Furthermore, the Federal Government can reduce taxes on material imports relating to sustainability research and development activities and environmentally friendly transport and material handling equipment and also provide export subsidies for sustainable products. Additionally, it can offer incentives for participating in sustainability projects such as energy-saving schemes. These initiatives help prepare industries for long-term environmental challenges while improving economic performance.

The current sustainability improvement projects involving government departments and agencies are mostly related to advancing technologies. For example, the activities of Commonwealth Scientific and Industrial Research Organisation (CSIRO) are aimed at innovating advanced sustainable manufacturing technologies in areas such as medical technologies, metal processing, aerospace and fibre industries (CSIRO 2015). The findings of this study provide consideration of how these technologies can be further applied to improve the sustainability of supply chains in those industries. For example, technological advancement in carbon fibre needs input materials, such as organic polymers, gases and liquids. It is, therefore, important to examine the implications of carbon fibre development for the sustainability of these material suppliers. Carbon fibre can be combined with other materials to develop composites that are used in industries such as aerospace, automotive and in the manufacture of sporting goods. Carbon fibre composites allow the manufacture of lightweight products in those industries.

Lightweight products can improve the sustainability of industries and their downstream partners by reducing energy consumption. Thus the development of composite materials can improve the sustainability in supply chains. However, the use of carbon fibre composites requires changes in manufacturing processes and these changes need the development of new technologies. If research projects can develop and transfer that knowledge, then industries can reap the full benefits of carbon fibre composites.

This study found that sustainability initiatives are long-term activities that require a suitable workforce. The government can assist through educational policies and training programmes aimed at inculcating a sustainability mindset. Driving supply chains towards social and environmental sustainability would be easier when decision-makers and employees have sustainability-oriented attitudes. These strategies would drive the development of a workforce supportive of sustainability in Australia.

8.4 Limitations of the research

A number of limitations are noted in this study. First, the qualitative interviews were conducted with manufacturers that served as focal firms in the supply chain to understand their perspectives about the agile and resilient attributes and their sustainability practices. Future studies could include the perspectives of other firms in the supply chain, such as from suppliers, wholesalers, retailers and logistics providers.

Second, even though the survey was devised to represent all the stages in the manufacturing supply chain, the resulting sample was relatively small and thus constrained the examination of causal relationships for different supply chain stages. Market factors and the stakeholder pressure may differ for industries. As a result, the presence of agile, resilient and sustainable practices would vary at the different stages. The findings of this study do not reflect those aspects.

Third, the data in this study did not allow capturing the effect of time lag between environmental and social sustainability initiatives and the impact on economic sustainability. The social and environmental sustainability initiatives tend to require investments upfront. The benefits of these initiatives accruing to economic sustainability, however, occur in the long term. Since this study was conducted as a cross-sectional study, the data for examining social, environmental and economic sustainability were collected at the same time. Not accounting for the time-lag effect

could be one reason for the absence of any significant relationships between social or environmental sustainability with economic sustainability.

Fourth, this study considered the manufacturing sector at a broader level covering all industries that fall within the manufacturing division in Australia and New Zealand Standard Industrial Classification (ANZSIC) and their supply chains. Since each manufacturing industry has unique industries representing their upstream and downstream supply chains, the results do not reflect the impact of agility and resilience on each manufacturing industry supply chain.

Finally, the current study does not account for the market factors such as entry of new players and cheaper products which could affect economic sustainability. The geographical location of firms is also not a consideration, even though it could affect a firm's economic sustainability. For instance, a firm that operates in a rural area may have less access to resources, have insufficient infrastructure and fewer market opportunities; since these market and geographical factors were not factored, the findings may not show how the impact of agility and resilience on sustainability varies on these factors.

8.5 Future research directions

This study presents opportunities for future research. First, future studies could include the perspectives from other stages in the supply chain to the qualitative phase. This could be done by incorporating firms that represent upstream and downstream stages, including suppliers, wholesalers, retailers and logistics providers.

Second, to better understand how agility and resilience affect sustainability at the different stages in the supply chain, future studies can be conducted using multi-level analysis with a larger sample set. A quota system can be applied to draw samples to represent all the stages in supply chain during data collection. Furthermore, this can be extended by analysing samples of each stage based on the size of the firm. The results will provide a better understanding of the effects of agility and resilience on the sustainability of small and medium-sized and large firms at each stage in the supply chain.

Third, sustainability dimensions can be measured using objective and quantifiable methods. Metric measures are suggested for sustainability measurement. These

measures are free of the drawbacks of subjective judgements of respondents and therefore, provide more accurate and reliable data to measure sustainability. Examples of metric measures are the percentages of emission reduction, waste reduction, investment in human resource development activities, and an increase in sales and profits. These measures would provide an additional perspective by revealing the actual outcomes of each sustainability dimension.

Fourth, the theoretical model of this study was underpinned by the dynamic capability view and social capital theory. To understand how institutional factors influence transforming agile and resilient capabilities to sustainability, studies can consider using different theoretical viewpoints, such as institutional theory.

Finally, this study considered the manufacturing sector at a broader level covering all industries that fall within the manufacturing division in ANZSIC and their supply chains. Further studies can examine the supply chains of specific industries such as meat processing, tyre manufacturing or metal furniture manufacturing. This study can, therefore, be replicated to individual industry supply chains to gain a better understanding of the impact of agility and resilience on the sustainability of their supply chains.

8.6 Conclusion

The goal of this study was to understand the role of dynamic capabilities in developing sustainable supply chains. First, the study advocated supply chain agility and resilience as essential dynamic capabilities for firms to operate under market changes. Agility and resilience are dynamic capabilities, and the study proposed that these capabilities can facilitate adoption of sustainable practices in supply chains. Furthermore, social capital developed through agility and resilience was identified as assisting sustainability and resource exchange across firms' boundaries.

Against this background, this study investigated how agility and resilience affect the sustainability of firms in the supply chain in the Australian manufacturing sector. To answer this overarching research question, the study was designed to address three sub-questions related to the firms in this context: Q1) What are the attributes of supply chain agility and resilience? Q2) What sustainability practices are present? Q3) What are the impacts of agility and resilience on social, environmental and economic sustainability?

The first two research questions (Q1 and Q2) were addressed in the qualitative study. The third research question (Q3) was addressed in the quantitative study. The findings revealed that the attributes of supply chain agility were identifying market changes through various sources and responding to them in a timely manner with flexible strategies and operations (Q1). The attributes of resilience were withstanding sudden changes, cooperating to overcome disruptions and minimising disruptive events (Q1). Social sustainability practices were identified as ensuring employee and community wellbeing, conducting businesses ethically and improving social sustainability in the supply chain (Q2). The environmental practices involved having management systems, reducing the environmental impacts of products and processes, preserving natural resources and enhancing environmental sustainability in supply chains (Q2). The economic sustainability practices were related to financial and market performance, and investments (Q2). The findings highlight that supply chain agility enables resilience and the resilience facilitates social and environmental sustainability (Q3). The findings show that agility enables resilient capabilities by offering processes and developing trust among supply chain partner firms. Resilience as a capability to prepare, respond and recover from disruptions stimulates implementing social and environmental practices. Social capital developed among supply chain partners, while being resilient, further facilitates social and environmental practices implementation. In this manner, agility and resilience affect the social and environmental sustainability of firms in the supply chain in the Australian manufacturing sector. This study, therefore, extends the understanding of how agility and resilience are instrumental in the triple bottom line of sustainability.

The results contribute to the literature in agile and resilient supply chains by confirming the dynamic capability nature of their attributes and the social capital developed through relationships. Additionally, the findings expand the concept of resilience by recognising the proactive aspect (i.e., by removing causes of disruptions at an early stage). The study expanded the understanding of the social and environmental practices employed by manufacturing firms in dynamic markets and the challenges of implementing sustainability activities in supply chains.

The study also examined the impacts of social and environmental sustainability on economic sustainability, and the impact of environmental sustainability on social sustainability. While environmental sustainability can lead to social sustainability, none

of these dimensions were found to enhance economic sustainability in the short term. Neither agility nor resilience exerted a significant impact on economic sustainability. Nevertheless, building agile and resilient capabilities to embrace market dynamics helps supply chains to enhance their social and environmental sustainability. Sustainability is vital to the long-term survival of the business while also meeting the social and environmental goals of the stakeholders (Seuring & Müller 2008a). This can be achieved by minimising negative social and environmental impacts (Pagell & Shevchenko 2014). In this context, the positive social and environmental sustainability achieved through agility and resilience indicates the possibility of long-term economic success and signals business viability. The results, therefore, reveal that developing agile and resilient capabilities enables sustainability in manufacturing supply chains in Australia.

The findings offer valuable implications for supply chain research and practice and for governments, and demonstrate the importance of supply chain agility and resilience for sustainability in the Australian manufacturing supply chain context. Such an understanding ensures that supply chains enhance their agility in order to be resilient and sustainable, which in turn, would help the Australian manufacturing sector to survive in the long term.

References

Abbasi, M & Nilsson, F 2012, 'Themes and challenges in making supply chains environmentally sustainable', *Supply Chain Management: An International Journal,* vol. 17, no. 5, pp. 517–530.

Adler, PS & Kwon, SW 2002, 'Social capital: prospects for a new concept', *Academy of Management Review,* vol. 27, no. 1, pp. 17–40.

Ağan, Y, Kuzey, C, Acar, MF & Açıkgöz, A 2016, 'The relationships between corporate social responsibility, environmental supplier development, and firm performance', *Journal of Cleaner Production,* vol. 112, pp. 1872–1881.

Agarwal, A, Shankar, R & Tiwari, M 2006, 'Modeling the metrics of lean, agile and leagile supply chain: an ANP-based approach', *European Journal of Operational Research,* vol. 173, no. 1, pp. 211–225.

Agarwal, A, Shankar, R & Tiwari, M 2007, 'Modeling agility of supply chain', *Industrial Marketing Management,* vol. 36, no. 4, pp. 443–457.

Ageron, B, Gunasekaran, A & Spalanzani, A 2012, 'Sustainable supply management: an empirical study', *International Journal of Production Economics,* vol. 140, no. 1, pp. 168–182.

Aguinis, H, Gottfredson, RK & Joo, H 2013, 'Best-practice recommendations for defining, identifying, and handling outliers', *Organizational Research Methods,* vol. 16, no. 2, pp. 270–301.

Ahi, P & Searcy, C 2013, 'A comparative literature analysis of definitions for green and sustainable supply chain management', *Journal of Cleaner Production,* vol. 52, pp. 329–341.

Ahuja, G 2000, 'Collaboration networks, structural holes, and innovation: a longitudinal study', *Administrative Science Quarterly,* vol. 45, no. 3, pp. 425–455.

Allison, PD 2003, 'Missing data techniques for structural equation modeling', *Journal of Abnormal Psychology,* vol. 112, no. 4, pp. 545–557.

Alvarez, G, Pilbeam, C & Wilding, R 2010, 'Nestlé Nespresso AAA sustainable quality program: an investigation into the governance dynamics in a multi-stakeholder supply

chain network', *Supply Chain Management: An International Journal,* vol. 15, no. 2, pp. 165–182.

Ambulkar, S, Blackhurst, J & Grawe, S 2015, 'Firm's resilience to supply chain disruptions: scale development and empirical examination', *Journal of Operations Management,* vol. 33–34, pp. 111–122.

Andersen, M & Skjoett-Larsen, T 2009, 'Corporate social responsibility in global supply chains', *Supply Chain Management: An International Journal,* vol. 14, no. 2, pp. 75–86.

Anderson, JC & Gerbing, DW 1984, 'The effect of sampling error on convergence, improper solutions, and goodness-of-fit indices for maximum likelihood confirmatory factor analysis', *Psychometrika,* vol. 49, no. 2, pp. 155–173.

Anderson, JC & Gerbing, DW 1988, 'Structural equation modeling in practice: a review and recommended two-step approach', *Psychological Bulletin,* vol. 103, no. 3, pp. 411–423.

Aragon-Correa, JA & Sharma, S 2003, 'A contingent resource-based view of proactive corporate environmental strategy', *Academy of Management Review,* vol. 28, no. 1, pp. 71–88.

Armstrong, JS & Overton, TS 1977, 'Estimating nonresponse bias in mail surveys', *Journal of Marketing Research,* vol. 14, no. 3, pp. 396−402.

Aronsson, H, Abrahamsson, M & Spens, K 2011, 'Developing lean and agile health care supply chains', *Supply Chain Management: An International Journal,* vol. 16, no. 3, pp. 176–183.

Ashby, A, Leat, M & Hudson-Smith, M 2012, 'Making connections: a review of supply chain management and sustainability literature', *Supply Chain Management: An International Journal,* vol. 17, no. 5, pp. 497–516.

Association for Manufacturing Excellence 2016, *Resources,* Association of Manufacturing Excellence (Australia), viewed 21 July 2016, <http://www.ame.org.au/>.

Ateş, MA, Bloemhof, J, van Raaij, EM & Wynstra, F 2012, 'Proactive environmental strategy in a supply chain context: the mediating role of investments', *International Journal of Production Research,* vol. 50, no. 4, pp. 1079–1095.

Australian Bureau of Statistics (ABS) 2016a, *1292.0 - Australian and New Zealand standard industrial classification (ANZSIC), 2006 (revision 1.0),* ABS, viewed 19 June 2016, <http://www.abs.gov.au/AUSSTATS/abs@.nsf/Previousproducts/9148F27F324E911BCA25711F00146E35?opendocument>.

Australian Bureau of Statistics (ABS) 2016b, *8155.0 - Australian industry, 2014-15,* ABS, viewed 28 June 2016, <http://www.abs.gov.au/AUSSTATS/abs@.nsf/DetailsPage/8155.02014-15?OpenDocument>.

Australian Bureau of Statistics (ABS) 2016c, *8155.0 - Australian industry, 2014-15*, ABS, viewed 28 June 2016, <http://www.abs.gov.au/AUSSTATS/abs@.nsf/Latestproducts/8155.0Main%20Features32014-15?opendocument&tabname=Summary&prodno=8155.0&issue=2014-15&num=&view=>.

Australian Bureau of Statistics (ABS) 2016d, *1292.0 - Australian and New Zealand standard industrial classification (ANZSIC), 2006 (revision 1.0)*, ABS, viewed 19 June 2016, <http://www.abs.gov.au/AUSSTATS/abs@.nsf/Previousproducts/1292.0Contents12006%20(Revision%201.0)?opendocument&tabname=Summary&prodno=1292.0&issue=2006%20(Revision%201.0)&num=&view=>.

Australian Bureau of Statistics (ABS) 2017, *8163.0 - Patterns of innovation in Australian businesses, 2005*, ABS, viewed 4 April 2017, < http://www.abs.gov.au/ausstats/abs@.nsf/Latestproducts/8163.0Main%20Features42005>.

Australian Logistics Council 2013, *Signatories to ALC's codes of practice*, Australian Logistics Council Australian Logistics Council Safety, viewed 21 July 2016, <http://www.alcsafety.com.au/>.

Australian Retailers Association 2016, *ARA member services*, Australian Retailers Association, viewed 21 July 2016, < http://retail.org.au/membership-services/>.

Australian Steel Institute 2016, *Environmental sustainability*, Australian Steel Institute, viewed 21 July 2016, <http://steel.org.au/key-issues/sustainability>.

Autry, CW & Griffis, SE 2008, 'Supply chain capital: the impact of structural and relational linkages on firm execution and innovation', *Journal of Business Logistics*, vol. 29, no. 1, pp. 157–173.

Awaysheh, A & Klassen, RD 2010, 'The impact of supply chain structure on the use of supplier socially responsible practices', *International Journal of Operations & Production Management*, vol. 30, no. 12, pp. 1246–1268.

Azevedo, SG, Carvalho, H & Machado, VC 2011, 'The influence of green practices on supply chain performance: a case study approach', *Transportation Research Part E: Logistics and Transportation Review*, vol. 47, no. 6, pp. 850–871.

Azevedo, SG, Govindan, K, Carvalho, H & Cruz-Machado, V 2013, 'Ecosilient Index to assess the greenness and resilience of the upstream automotive supply chain', *Journal of Cleaner Production*, vol. 56, pp. 131–146.

Bagozzi, RP & Yi, Y 1988, 'On the evaluation of structural equation models', *Journal of the Academy of Marketing Science*, vol. 16, no. 1, pp. 74–94.

Bai, C, Sarkis, J & Wei, X 2010, 'Addressing key sustainable supply chain management issues using rough set methodology', *Management Research Review*, vol. 33, no. 12, pp. 1113–1127.

Bals, L & Tate, W 2016, 'The journey from triple bottom line (TBL) sustainable supply chains to TBL shared value chain design', in L Bals & W Tate (eds*), Implementing triple bottom line sustainability into global supply chains*, Greenleaf Publishing Limited, Sheffield, pp. 1–11, viewed 21 November 2016, <https://books-google-com-au.access.library.unisa.edu.au/books?hl=en&lr=&id=bGtpDAAAQBAJ&oi=fnd&pg=PP1&dq=bals+and+tate&ots=EA5X7_4KU4&sig=D7q62muZhaezj1Leg1c5w0YqbFc#v=onepage&q=resilie&f=false>.

Banerjee, SB 2010, 'Governing the global corporation: a critical perspective', *Business Ethics Quarterly*, vol. 20, no. 2, pp. 265–274.

Banerjee, SB 2011, 'Embedding sustainability across the organization: a critical perspective', *Academy of Management Learning & Education*, vol. 10, no. 4, pp. 719–731.

Bansal, P 2005, 'Evolving sustainably: a longitudinal study of corporate sustainable development', *Strategic Management Journal*, vol. 26, no. 3, pp. 197–218.

Baraldi, AN & Enders, CK 2010, 'An introduction to modern missing data analyses', *Journal of School Psychology*, vol. 48, no. 1, pp. 5–37.

Baramichai, M, Zimmers Jr, EW & Marangos, CA 2007, 'Agile supply chain transformation matrix: an integrated tool for creating an agile enterprise', *Supply Chain Management: An International Journal*, vol. 12, no. 5, pp. 334–348.

Barnea, A & Rubin, A 2010, 'Corporate social responsibility as a conflict between shareholders', *Journal of Business Ethics*, vol. 97, pp. 71–86.

Barriball, KL & While, A 1994, 'Collecting Data using a semi-structured interview: a discussion paper', *Journal of Advanced Nursing*, vol. 19, no. 2, pp. 328–335.

Bartos, S, Balmford, M, Karolis, A, Swansson, J & Davey, A 2012, *Resilience in the Australian food supply chain*, Department of Agriculture, Fisheries and Forestry, Commonwealth of Australia, viewed 9 April 2016, <http://www.agriculture.gov.au/SiteCollectionDocuments/ag-food/food/national-food-plan/submissions-received/resilience-food-supply.pdf>.

Basu, K & Palazzo, G 2008, 'Corporate social responsibility: a process model of sensemaking', *Academy of Management Review*, vol. 33, no. 1, pp. 122–136.

Bentler, PM & Bonett, DG 1980, 'Significance tests and goodness of fit in the analysis of covariance structures', *Psychological Bulletin*, vol. 88, no. 3, pp. 588–606.

Bergman, MM 2010, 'On concepts and paradigms in mixed methods research', *Journal of Mixed Methods Research*, vol. 4, no. 3, pp. 171–175.

Beske, P & Seuring, S 2014, 'Putting sustainability into supply chain management', *Supply Chain Management: An International Journal*, vol. 19, no. 3, pp. 322–331.

Beske, P 2012, 'Dynamic capabilities and sustainable supply chain management', *International Journal of Physical Distribution & Logistics Management,* vol. 42, no. 4, pp. 372–387.

Beske, P, Land, A & Seuring, S 2014, 'Sustainable supply chain management practices and dynamic capabilities in the food industry: a critical analysis of the literature', *International Journal of Production Economics,* vol. 152, pp. 131–143.

Bigliardi, B & Galati, F 2013, 'Innovation trends in the food industry: the case of functional foods', *Trends in Food Science & Technology,* vol. 31, pp. 118–129.

Blackhurst, J, Dunn, KS & Craighead, CW 2011, 'An empirically derived framework of global supply resiliency', *Journal of Business Logistics,* vol. 32, no. 4, 12, pp. 374–391.

Blome, C, Schoenherr, T & Rexhausen, D 2013, 'Antecedents and enablers of supply chain agility and its effect on performance: a dynamic capabilities perspective', *International Journal of Production Research,* vol. 51, no. 4, pp. 1295–1318.

Blonska, A, Storey, C, Rozemeijer, F, Wetzels, M & de Ruyter, K 2013, 'Decomposing the effect of supplier development on relationship benefits: the role of relational capital', *Industrial Marketing Management,* vol. 42, pp. 1295–1306.

Bluhm, DJ, Harman, W, Lee, TW & Mitchell, TR 2011, 'Qualitative research in management: a decade of progress', *Journal of Management Studies,* vol. 48, no. 8, pp. 1866–1891.

Blunch, NJ 2013, *Introduction to structural equation modeling using IBM SPSS statistics and AMOS,* 2nd edn, Sage Publications, London.

Bode, C, Wagner, SM, Petersen, KJ & Ellram, LM 2011, 'Understanding responses to supply chain disruptions: insights from information processing and resource dependence perspectives', *Academy of Management Journal,* vol. 54, no. 4, pp. 833–856.

Bollen, K & Lennox, R 1991, 'Conventional wisdom on measurement: a structural equation perspective', *Psychological Bulletin,* vol. 110, no. 2, pp. 305–314.

Bollen, KA & Stine, RA 1992, 'Bootstrapping goodness-of-fit measures in structural equation models', *Sociological Methods and Research,* vol. 21, no. 2, pp. 205–205.

Bollen, KA 1989, *Structural equations with latent variables,* Wiley, New York.

Boomsma, A & Hoogland, JJ 2001, 'The robustness of LISREL modeling revisited', in R Cudeck, S du Toit & D Sorbom (eds), *Structural equation models: present and future,* Scientific Software International, Chicago, pp. 139–168.

Boström, M 2012, 'A missing pillar? Challenges in theorizing and practicing social sustainability: introduction to the special issue', *Sustainability: Science, Practice, & Policy,* vol. 8, no. 1, pp. 1–14.

Bottani, E 2010, 'Profile and enablers of agile companies: an empirical investigation', *International Journal of Production Economics*, vol. 125, no. 2, pp. 251–261.

Bourdieu, P 1986, 'The forms of capital', in JG Richardson (ed.), *Handbook of theory and research for the sociology of education*, Greenwood Press, New York, pp. 241–258.

Bovaird, J & Koziol, N 2012, 'Measurement models for ordered-categorical indicators', in RH Hoyle (ed.), *Handbook of structural equation modeling*, Guilford Publications, New York, pp. 495–511, viewed 8 December 2016, ProQuest Ebook Central.

Brandon-Jones, E, Squire, B, Autry, CW & Petersen, KJ 2014, 'A contingent resource-based perspective of supply chain resilience and robustness', *Journal of Supply Chain Management*, vol. 50, no. 3, pp. 55–73.

Braungart, M, McDonough, W & Bollinger, A 2007, 'Cradle-to-cradle design: creating healthy emissions – a strategy for eco-effective product and system design', *Journal of Cleaner Production*, vol. 15, pp. 1337–1348.

Braunscheidel, MJ & Suresh, NC 2009, 'The organizational antecedents of a firm's supply chain agility for risk mitigation and response', *Journal of Operations Management*, vol. 27, no. 2, pp. 119–140.

Braziotis, C, Bourlakis, M, Rogers, H & Tannock, J 2013, 'Supply chains and supply networks: distinctions and overlaps', *Supply Chain Management: An International Journal*, vol. 18, no. 6, pp. 644–652.

Browaeys, MJ & Fisser, S 2012, 'Lean and agile: an epistemological reflection', *The Learning Organization*, vol. 19, no. 3, pp. 207–218.

Browne, MW & Cudeck, R 1992, 'Alternative ways of assessing model fit', *Sociological Methods and Research*, vol. 21, no. 2, pp. 230–258.

Bryman, A 2008, *Social research methods*, 3rd edn, Oxford University Press, Oxford.

Burt, RS 1992, *Structural holes: the social structure of competition*, Harvard University Press, Cambridge, viewed 17 June 2014, EBSCO Host.

Burt, RS 1997, 'The contingent value of social capital', *Administrative Science Quarterly*, vol. 42, no. 2, pp. 339–365.

Byrne, BM 2001, *Structural equation modeling with AMOS: basic concepts, applications, and programming*, Lawrence Erlbaum Associates, Mahwah, NJ.

Byrne, BM 2010, *Structural equation modeling with AMOS: basic concepts, applications, and programming*, 2nd edn, Routledge, New York, viewed 16 August 2015, EBSCO Host.

Cachia, M & Millward, L 2011, 'The telephone medium and semi-structured interviews: a complementary fit', *Qualitative Research in Organizations and Management: An International Journal*, vol. 6, no. 3, pp. 265–277.

Caniëls, MCJ, Gehrsitz, MH & Semeijn, J 2013, 'Participation of suppliers in greening supply chains: an empirical analysis of German automotive suppliers', *Journal of Purchasing & Supply Management,* vol. 19, no. 3, pp. 134–143.

Carbone, V & Moatti, V 2008, 'Greening the supply chain: preliminary results of a global survey', *Supply Chain Forum: An International Journal,* vol. 9, no. 2, pp. 66–76.

Carbone, V, Moatti, V & Wood, CH 2012, 'Diffusion of sustainable supply chain management: toward a conceptual framework', *Supply Chain Forum: An International Journal,* vol. 13, no. 4, pp. 26–39.

Cardoso, SR, Barbosa-Póvoa, APFD & Relvas, S 2013, 'Design and planning of supply chains with integration of reverse logistics activities under demand uncertainty', *European Journal of Operational Research*, vol. 226, no. 3, pp. 436−451.

Carroll, AB & Shabana, KM 2011, *The business case for corporate social responsibility*, The Conference Board, viewed 16 July 2016, < https://www.conference-board.org/search/google/?q=The+business+case+for+corporate+social+responsibility>.

Carter, CR & Easton, PL 2011, 'Sustainable supply chain management: evolution and future directions', *International Journal of Physical Distribution & Logistics Management*, vol. 41, no. 1, pp. 46–62.

Carter, CR & Jennings, MM 2004, 'The role of purchasing in corporate social responsibility: a structural equation analysis', *Journal of Business Logistics,* vol. 25, no. 1, pp. 145–186.

Carter, CR & Rogers, DS 2008, 'A framework of sustainable supply chain management: moving toward new theory', *International Journal of Physical Distribution & Logistics Management*, vol. 38, no. 5, pp. 360–387.

Carvalho, H, Azevedo, SG & Cruz-Machado, V 2012, 'Agile and resilient approaches to supply chain management: influence on performance and competitiveness', *Logistics Research,* vol. 4, no. 1/2, pp. 49−62.

Carvalho, H, Duarte, S & Cruz-Machado, V 2011, 'Lean, agile, resilient and green: divergencies and synergies', *International Journal of Lean Six Sigma,* vol. 2, no. 2, pp. 151–179.

Castro, H, Putnik, GD & Shah, V 2012, 'A review of agile and lean manufacturing as issues in selected international and national research and development programs and roadmaps', *The Learning Organization,* vol. 19, no. 3, pp. 267–289.

Chadwick, C, Hunter, LW & Walston, SL 2004, 'Effects of downsizing practices on the performance of hospitals', *Strategic Management Journal,* vol. 25, no. 5, pp. 405−427.

Chakraborty, S & Mandal, S 2011, 'Revisiting supply chain agility from an IT perspective: an empirical study', *IUP Journal of Supply Chain Management,* vol. 8, no. 2, pp. 21–33.

Chan, HK & Chan, FTS 2010, 'A review of coordination studies in the context of supply chain dynamics', *International Journal of Production Research,* vol. 48, no. 10, pp. 2793–2819.

Chandra, C & Kumar, S 2000, 'Supply chain management in theory and practice: a passing fad or a fundamental change?', *Industrial Management & Data Systems,* vol. 100, no. 3, pp. 100–114.

Chang, SJ, Witteloostuijn, AV & Eden, L 2010, 'From the editors: common method variance in international business research', *Journal of International Business Studies,* vol. 41, no. 2, pp. 178–184.

Charles, A, Lauras, M & Wassenhove, LV 2010, 'A model to define and assess the agility of supply chains: building on humanitarian experience', *International Journal of Physical Distribution & Logistics Management,* vol. 40, no. 8/9, pp. 722–741.

Cheng, J-H, Chen, M-C & Huang, C-M 2014, 'Assessing inter-organizational innovation performance through relational governance and dynamic capabilities in supply chains', *Supply Chain Management: An International Journal*, vol. 19, no. 2, pp. 173–186.

Cheung, GW & Lau, RS 2008, 'Testing mediation and suppression effects of latent variables: bootstrapping with structural equation models', *Organizational Research Methods,* vol. 11, no. 2, pp. 296–325.

Cheung, GW & Rensvold, RB 2002, 'Evaluating goodness-of-fit indexes for testing measurement invariance', *Structural Equation Modeling: A Multidisciplinary Journal*, vol. 9, no. 2, pp. 233–255.

Chiang, CY, Kocabasoglu-Hillmer, C & Suresh, NC 2012, 'An empirical investigation of the impact of strategic sourcing and flexibility on firm's supply chain agility', *International Journal of Operations & Production Management,* vol. 32, no. 1, pp. 49–78.

Chiarini, A 2014, 'Strategies for developing an environmentally sustainable supply chain: differences between manufacturing and service sectors', *Business Strategy and the Environment*, vol. 23, no. 7, pp. 493–504.

Chopra, S & Sodhi, MS 2014, 'Reducing the risk of supply chain disruptions', *MIT Sloan Management Review,* vol. 55, no. 3, pp. 73–80.

Christopher, M & Holweg, M 2011, '"Supply Chain 2.0": managing supply chains in the era of turbulence', *International Journal of Physical Distribution & Logistics Management,* vol. 41, no. 1, pp. 63–82.

Christopher, M & Peck, H 2004, 'Building the resilient supply chain', *The International Journal of Logistics Management,* vol. 15, no. 2, pp. 1–13.

Christopher, M & Towill, DR 2002, 'Developing market specific supply chain strategies', *The International Journal of Logistics Management,* vol. 13, no. 1, pp. 1–14.

Christopher, M 2000, 'The agile supply chain: competing in volatile markets', *Industrial Marketing Management,* vol. 29, no. 1, pp. 37–44.

Christopher, M 2011, *Logistics and supply chain management*, 4th edn, Financial Times Prentice Hall, Harlow.

Christopher, M 2012, 'Managing supply chain complexity: identifying the requisite skills', *Supply Chain Forum: An International Journal,* vol. 13, no. 2, pp. 4–9.

Christopher, M, Lowson, R & Peck, H 2004, 'Creating agile supply chains in the fashion industry', *International Journal of Retail & Distribution Management,* vol. 32, no. 8, pp. 367–376.

Churchill, GA 1979, 'A paradigm for developing better measures of marketing constructs', *Journal of Marketing Research,* vol. 16, no. 1, pp. 64–73.

Ciliberti, F, Pontrandolfo, P & Scozzi, B 2008, 'Investigating corporate social responsibility in supply chains: a SME perspective', *Journal of Cleaner Production,* vol. 16, no. 15, pp. 1579–1588.

Clift, R 2003, 'Metrics for supply chain sustainability', *Clean Technologies and Environmental Policy,* vol. 5, pp. 240–247.

Closs, DJ, Speier, C & Meacham, N 2011, 'Sustainability to support end-to-end value chains: the role of supply chain management', *Journal of the Academy of Marketing Science,* vol. 39, no. 1, pp. 101–116.

Cohen, J 1960, 'A coefficient of agreement for nominal scale', *Educational and Psychological Measurement,* vol. 20, no. 1, pp. 37–46.

Cohen, L, Manion, L & Morrison, K 2011, *Research methods in education*, 7th edn, Routledge, Oxon, viewed 9 December 2016, ProQuest Ebook Central.

Coleman, JS 1988, 'Social capital in the creation of human capital', *American Journal of Sociology,* vol. 94, pp. S95–S120.

Colicchia, C & Strozzi, F 2012, 'Supply chain risk management: a new methodology for a systematic literature review', *Supply Chain Management: An International Journal,* vol. 17, no. 4, pp. 403–418.

Colicchia, C, Melacini, M & Perotti, S 2011, 'Benchmarking supply chain sustainability: insights from a field study', *Benchmarking: An International Journal,* vol. 18, no. 5, pp. 705–732.

Collins, RS & Cordon, C 1997, 'Survey methodology issues in manufacturing strategy and practice research', *International Journal of Operations & Production Management,* vol. 17, no. 7, pp. 697–706.

Commonwealth of Australia 2014, *Industry innovation and competitiveness agenda: an action plan for a stronger Australia*, Commonwealth of Australia, viewed 05 January

2016,
<https://www.dpmc.gov.au/sites/default/files/publications/industry_innovation_competitiveness_agenda.pdf>.

Commonwealth Scientific and Industrial Research Organisation (CSIRO) 2015, *Manufacturing*, CSIRO, viewed 22 July 2016, <http://www.csiro.au/en/Research/MF>.

Conway, JM & Lance, CE 2010, 'What reviewers should expect from authors regarding common method bias in organizational research', *Journal of Business and Psychology*, vol. 25, no. 3, pp. 325–334.

Cooper, MC & Ellram, LM 1993, 'Characteristics of supply chain management and the implications for purchasing and logistics strategy', *The International Journal of Logistics Management*, vol. 4, no. 2, pp. 13–24.

Cooper, MC, Lambert, DM & Pagh, JD 1997, 'Supply chain management: more than a new name for logistics', *The International Journal of Logistics Management*, vol. 8, no. 1, pp. 1–14.

Costello, A & Osborne, J 2005, 'Best practices in exploratory factor analysis: four recommendations for getting the most from your analysis', *Practical Assessment, Research & Evaluation*, vol. 10, no. 7, pp. 1–9.

Council of Australian Governments 2011, *National strategy for disaster resilience*, Commonwealth of Australia, viewed 13 July 2016, <https://www.ag.gov.au/EmergencyManagement/Documents/NationalStrategyforDisasterResilience.PDF>.

Cramer, JM 2008, 'Organising corporate social responsibility in international product chains', *Journal of Cleaner Production*, vol. 16, no. 3, pp. 395–400.

Creswell, JW 2009, *Research design: qualitative, quantitative, and mixed methods approaches*, 3rd edn, Sage Publications, Thousand Oaks, CA.

Creswell, JW 2013, *Qualitative inquiry & research design: choosing among five approaches*, 3rd edn, Sage Publications, Thousand Oaks, CA.

Creswell, JW 2014, *Research design: qualitative, quatitative and mixed methods approaches*, 4th edn, Sage Publications, Thousand Oaks, CA.

Cruz, JM 2013, 'Mitigating global supply chain risks through corporate social responsibility', *International Journal of Production Research*, vol. 51, no. 13, pp. 3995–4010.

CSIRO Future Manufacturing Flagship Sustainable Manufacturing Initiative 2012, *What does sustainable manufacturing mean to Australia? A summary of the CSIRO future manufacturing industry engagement workshop, March 2012*, Commonwealth Scientific and Industrial Research Organisation, viewed 9 August 2013 <http://www.csiro.au/~/media/CSIROau/Portals/Publications/Sustainable%20Manufacturing%20Workshop%20Report%202012.pdf.>.

CSIRO Future Manufacturing Flagship Sustainable Manufacturing Initiative 2011, *What does sustainable manufacturing mean to Australia? – a thought starter*, green paper, Commonwealth Scientific and Industrial Research Organisation, viewed 8 August 2013, <http://www.csiro.au/en/Organisation-Structure/Flagships/Future-Manufacturing-Flagship/Australian-Sustainable-Manufacturing-Initiative.aspx>.

Darnall, N, Jolley, GJ & Handfield, R 2008, 'Environmental management systems and green supply chain management: complements for sustainability?', *Business Strategy and the Environment*, vol. 17, no. 1, pp. 30–45.

Darnall, N, Seol, I & Sarkis, J 2009, 'Perceived stakeholder influences and organizations' use of environmental audits', *Accounting, Organizations and Society*, vol. 34, no. 2, pp. 170–187.

De Giovanni, P 2012, 'Do internal and external environmental management contribute to the triple bottom line?', *International Journal of Operations & Production Management*, vol. 32, no. 3, pp. 265–290.

Defee, CC & Fugate, BS 2010, 'Changing perspective of capabilities in the dynamic supply chain era', *The International Journal of Logistics Management*, vol. 21, no. 2, pp. 180–206.

Deloitte 2014, *Gas market transformations – economic consequences for the manufacturing sector*, Deloitte Access Economics, viewed 10 March 2016, <http://pdf.aigroup.asn.au/Deloitte%20Gas%20Market%20Transformations%20-%20Manufacturing%20Impacts%20Report%20-%20web%20final%20-%20July%2014%202014.pdf>.

Denzin, NK & Lincoln YS 2008, 'Introduction: the discipline and practice of qualitative research', in NK Denzin & YS Lincoln (eds), *The landscape of qualitative research*, 3rd edn, Sage Publications, Thousand Oaks, CA, pp. 1–43.

Department of Industry, Innovation and Science 2015, *Manufacturing data card - September quarter 2015*, Department of Industry, Innovation and Science, Australian Government, viewed 15 April 2016, <http://www.industry.gov.au/INDUSTRY/MANUFACTURINGPERFORMANCE/Pages/ManufacturingDataCard.aspx>.

Department of Industry, Innovation and Science 2016, *WHS/OH&S acts, regulations and codes of practice*, Department of Industry, Innovation and Science, Australian Government, viewed 08 January 2016, <http://www.business.gov.au/business-topics/employing-people/workplace-health-and-safety/Pages/whs-acts-regulations-and-codes-of-practice.aspx>.

Department of the Prime Minister and Cabinet 2015, *National innovation and science agenda*, Commonwealth of Australia, viewed 13 June 2016, <http://www.innovation.gov.au/system/files/case-study/National%20Innovation%20and%20Science%20Agenda%20-%20Report.pdf>.

DeVellis, RF 2012, *Scale development: theory and applications*, 3rd edn, Sage Publications, Thousand Oaks, CA.

Devinney, TM 2009, 'Is the socially responsible corporation a myth? The good, the bad, and the ugly of corporate social responsibility', *Academy of Management Perspectives,* vol. 23, no. 2, pp. 44–56.

Dey, PK & Cheffi, W 2013, 'Green supply chain performance measurement using the analytic hierarchy process: a comparative analysis of manufacturing organisations', *Production Planning & Control*, vol. 24, no. 8–9, pp. 702–720.

Diabat, A & Govindan, K 2011, 'An analysis of the drivers affecting the implementation of green supply chain management', *Resources, Conservation and Recycling,* vol. 55, no. 6, pp. 659–667.

Dillman, DA 2007, *Mail and internet surveys: the tailored design method*, 2nd edn, John Wiley & Sons, Hoboken, NJ.

Doody, O & Noonan, M 2013, 'Preparing and conducting interviews to collect data', *Nurse Researcher,* vol. 20, no. 5, pp. 28–32.

Dos Santos, MAO, Svensson, G & Padin, C 2013, 'Indicators of sustainable business practices: Woolworths in South Africa', *Supply Chain Management: An International Journal,* vol. 18, no. 1, pp. 104–108.

Dove, R 1994, 'The meaning of life and the meaning of agile', *Production,* vol. 106, no. 11, pp. 14–15.

Dove, R 1996, 'Agile supply-chain management', *Automotive Production,* vol. 108, no. 4, pp. 16–17.

Dyer, JH & Singh, H 1998, 'The relational view: cooperative strategy and sources of interorganizational competitive advantage', *Academy of Management Review*, vol. 23, no. 4, pp. 660–679.

Dyllick, T & Hockerts, K 2002, 'Beyond the business case for corporate sustainability', *Business Strategy and the Environment,* vol. 11, no. 2, pp. 130–141.

Easterby-Smith, M, Thorpe, R & Lowe, A 2002, *Management research: an introduction*, 2nd edn, Sage Publications, London.

Ehrgott, M, Reimann, F, Kaufmann, L & Carter, CR 2011, 'Social sustainability in selecting emerging economy suppliers', *Journal of Business Ethics*, vol. 98, no. 1, pp. 99–119.

Eisenhardt, KM & Martin, JA 2000, 'Dynamic capabilities: what are they?', *Strategic Management Journal,* vol. 21, no. 10–11, pp. 1105–1121.

Eisenhardt, KM 1989, 'Building theories from case study research', *Academy of Management Review*, vol. 14, no. 4, pp. 532–550.

Eisenmann, TR 2006, 'Internet companies' growth strategies: determinants of investment intensity and long-term performance', *Strategic Management Journal*, vol. 27, no. 12, pp. 1183–1204.

Elkington, J 1997, *Cannibals with forks: the triple bottom line of 21st century business*, Capstone, Oxford.

Elsayed, K 2006, 'Reexamining the expected effect of available resources and firm size on firm environmental orientation: an empirical study of UK firms', *Journal of Business Ethics*, vol. 65, no. 3, pp. 297–308.

Eltayeb, TK, Zailani, S & Ramayah, T 2011, 'Green supply chain initiatives among certified companies in Malaysia and environmental sustainability: investigating the outcomes', *Resources, Conservation and Recycling*, vol. 55, no. 5, pp. 495–506.

Enders, CK & Bandalos, DL 2001, 'The relative performance of full information maximum likelihood estimation for missing data in structural equation models', *Structural Equation Modeling: A Multidisciplinary Journal*, vol. 8, no. 3, pp. 430–457.

Enticott, G, Boyne, GA & Walker, RM 2009, 'The use of multiple informants in public administration research: data aggregation using organizational echelons', *Journal of Public Administration Research and Theory*, vol. 19, no. 2, pp. 229–253.

Eriksson, D & Svensson, G 2015, 'Elements affecting social responsibility in supply chains', *Supply Chain Management: An International Journal*, vol. 20, no. 5, pp. 561–566.

Erol, I, Velioğlu, MN, Şerifoğlu, FS, Büyüközkan, G, Aras, N, Çakar, ND & Korugan, A 2010, 'Exploring reverse supply chain management practices in Turkey', *Supply Chain Management: An International Journal*, vol. 15, no. 1, pp. 43–54.

Eshlaghy, AT, Mashayekhi, AN, Rajabzadeh, A & Razavian, MM 2010, 'Applying path analysis method in defining effective factors in organisation agility', *International Journal of Production Research*, vol. 48, no. 6, pp. 1765–1786.

Fabrigar, LR, Wegener, DT, MacCallum, RC & Strahan, EJ 1999, 'Evaluating the use of exploratory factor analysis in psychological research', *Psychological Methods*, vol. 4, no. 3, pp. 272–299.

Faisal, MN 2010, 'Analysing the barriers to corporate social responsibility in supply chains: an interpretive structural modelling approach', *International Journal of Logistics Research and Applications*, vol. 13, no. 3, pp. 179–195.

Fayezi, S, Zutshi, A & O'Loughlin, A 2015, 'How Australian manufacturing firms perceive and understand the concepts of agility and flexibility in the supply chain', *International Journal of Operations & Production Management*, vol. 35, no. 2, pp. 246–281.

Fearne, A, Martinez, MG & Dent, B 2012, 'Dimensions of sustainable value chains: implications for value chain analysis', *Supply Chain Management: An International Journal*, vol. 17, no. 6, pp. 575–581.

Fiksel, J, Goodman, I & Hecht, A 2014, 'Resilience: navigating toward a sustainable future', *Solutions*, vol. 5, no. 5, pp. 38–47.

Fiksel, J, Polyviou, M, Croxton, KL & Pettit, TJ 2015, 'From risk to resilience: learning to deal with disruption', *MIT Sloan Management Review*, vol. 56, no. 2, pp. 79–86.

Finstad, K 2010, 'Response interpolation and scale sensitivity: evidence against 5-point scales', *Journal of Usability Studies*, vol. 5, no. 3, pp. 104–110.

Fischer, J, Manning, AD, Steffen, W, Rose, DB, Daniell, K, Felton, A, Garnett, S, Gilna, B, Heinsohn, R, Lindenmayer, DB, Macdonald, B, Mills, F, Newell, B, Reid, J, Robin, L, Sherren, K & Wade, A 2007, 'Mind the sustainability gap', *Trends in Ecology and Evolution*, vol. 22, no. 12, pp. 621–624.

Foerstl, K, Reuter, C, Hartmann, E & Blome, C 2010, 'Managing supplier sustainability risks in a dynamically changing environment—sustainable supplier management in the chemical industry', *Journal of Purchasing and Supply Management*, vol. 16, no. 2, pp. 118–130.

Fombrun, CJ, Gardberg, NA & Barnett, ML 2000, 'Opportunity platforms and safety nets: corporate citizenship and reputational risk', *Business and Society Review*, vol. 105, no. 1, pp. 85–106.

Fornell, C & Larcker, DF 1981, 'Evaluating structural equation models with unobservable variables and measurement error', *Journal of Marketing Research*, vol. 18, no. 1, pp. 39–50.

Forza, C 2002, 'Survey research in operations management: a process-based perspective', *International Journal of Operations & Production Management*, vol. 22, no. 2, pp. 152–194.

Franklin, K 2015, 'Regulators put the spotlight on sustainability disclosure: are you ready to comply?', *Let's talk: sustainability*, March, no. 4, pp. 8–9, viewed 21 June 2016, <http://www.ey.com/Publication/vwLUAssetsPI/ey-lets-talk-sustainability-issue-4/$FILE/ey-lets-talk-sustainability-issue-4.pdf>.

Future Manufacturing Industry Innovation Council 2011, *Trends in manufacturing to 2020: a foresighting discussion paper*, Department of Innovation, Industry, Science and Research, viewed 5 June 2013, < https://www.google.com.au/?client=firefox-b-ab#q=Trends+in+manufacturing+to+2020%3A+a+foresighting+discussion+paper&gfe_rd=cr >.

Gallagher, D, Ting, L & Palmer, A 2008, 'A journey into the unknown; taking the fear out of structural equation modeling with AMOS for the first-time user', *The Marketing Review*, vol. 8, no. 3, pp. 255–275.

Garcia-Castro, R, Ariño, MA & Canela, MA 2010, 'Does social performance really lead to financial performance? Accounting for endogeneity', *Journal of Business Ethics,* vol. 92, no. 1, pp. 107–126.

Gillham, B 2005, *Research interviewing: the range of techniques*, Open University Press, Maidenhead, viewed 14 November 2016, ProQuest ebrary.

Gimenez, C & Sierra, V 2013, 'Sustainable supply chains: governance mechanisms to greening suppliers', *Journal of Business Ethics,* vol. 116, no. 1, pp. 189–203.

Gimenez, C & Tachizawa, EM 2012, 'Extending sustainability to suppliers: a systematic literature review', *Supply Chain Management: An International Journal,* vol. 17, no. 5, pp. 531–543.

Gimenez, C, Sierra, V & Rodon, J 2012, 'Sustainable operations: their impact on the triple bottom line', *International Journal of Production Economics,* vol. 140, no. 1, pp. 149–159.

Gladwin, TN, Kennelly, JJ & Krause, TS 1995, 'Shifting paradigms for sustainable development: implications for management theory and research', *Academy of Management Review,* vol. 20, no. 4, pp. 874–907.

Gligor, DM & Holcomb, M 2014, 'The road to supply chain agility: an RBV perspective on the role of logistics capabilities', *The International Journal of Logistics Management,* vol. 25, no. 1, pp. 160–179.

Gligor, DM & Holcomb, MC 2012a, 'Understanding the role of logistics capabilities in achieving supply chain agility: a systematic literature review', *Supply Chain Management: An International Journal,* vol. 17, no. 4, pp. 438–453.

Gligor, DM & Holcomb, MC 2012b, 'Antecedents and consequences of supply chain agility: establishing the link to firm performance', *Journal of Business Logistics,* vol. 33, no. 4, pp. 295–308.

Gligor, DM, Esmark, CL & Holcomb, MC 2015, 'Performance outcomes of supply chain agility: when should you be agile?', *Journal of Operations Management,* vol. 33–34, pp. 71–82.

Gligor, DM, Holcomb, MC & Stank, TP 2013, 'A multidisciplinary approach to supply chain agility: conceptualization and scale development', *Journal of Business Logistics,* vol. 34, no. 2, pp. 94–108.

Global Reporting Initiative 2015, *G4 sustainability reporting guidelines*, Global Reporting Initiative, viewed 21 July 2016, <https://www.globalreporting.org/resourcelibrary/GRIG4-Part1-Reporting-Principles-and-Standard-Disclosures.pdf>.

Gold, S, Hahn, R & Seuring, S 2013, 'Sustainable supply chain management in “base of the pyramid” food projects—a path to triple bottom line approaches for multinationals?', *International Business Review,* vol. 22, no. 5, pp. 784–799.

Gold, S, Seuring, S & Beske, P 2010, 'Sustainable supply chain management and inter-organizational resources: a literature review', *Corporate Social Responsibility and Environmental Management*, vol. 17, no. 4, pp. 230–245.

Goldsby, TJ, Griffis, SE & Roath, AS 2006, 'Modeling lean, agile, and leagile supply chain strategies', *Journal of Business Logistics*, vol. 27, no. 1, pp. 57–80.

Golgeci, I & Ponomarov, SY 2013, 'Does firm innovativeness enable effective responses to supply chain disruptions? An empirical study', *Supply Chain Management: An International Journal*, vol. 18, no. 6, pp. 604−617.

Golicic, SL & Smith, CD 2013, 'A meta-analysis of environmentally sustainable supply chain management practices and firm performance', *Journal of Supply Chain Management*, vol. 49, no. 2, pp. 78–95.

González, P, Sarkis, J & Adenso-Díaz, B 2008, 'Environmental management system certification and its influence on corporate practices: evidence from the automotive industry', *International Journal of Operations & Production Management*, vol. 28, no. 11, pp. 1021–1041.

González-Benito, J & González-Benito, Ó 2005, 'Environmental proactivity and business performance: an empirical analysis', *Omega*, vol. 33, no. 1, pp. 1–15.

Gopalakrishnan, K, Yusuf, YY, Musa, A, Abubakar, T & Ambursa, HM 2012, 'Sustainable supply chain management: a case study of British aerospace (BAe) systems', *International Journal of Production Economics*, vol. 140, no. 1, pp. 193–203.

Govindan, K, Azevedo, SG, Carvalho, H & Cruz-Machado, V 2014, 'Impact of supply chain management practices on sustainability', *Journal of Cleaner Production*, vol. 85, pp. 212–225.

Govindan, K, Khodaverdi, R & Jafarian, A 2013, 'A fuzzy multi criteria approach for measuring sustainability performance of a supplier based on triple bottom line approach', *Journal of Cleaner Production*, vol. 47, pp. 345–354.

Govindan, K, Palaniappan, M, Zhu, Q & Kannan, D 2012, 'Analysis of third party reverse logistics provider using interpretive structural modeling', *International Journal of Production Economics*, vol. 140, no. 1, pp. 204–211.

Govindan, K, Soleimani, H & Kannan, D 2015, 'Reverse logistics and closed-loop supply chain: a comprehensive review to explore the future', *European Journal of Operational Research*, vol. 240, no. 3, pp. 603–626.

Granovetter, MS 1973, 'The strength of weak ties', *American Journal of Sociology*, vol. 78, no. 6, pp. 1360–1380.

Green Jr, KW, Zelbst, PJ, Bhadauria, VS & Meacham, J 2012a, 'Do environmental collaboration and monitoring enhance organizational performance?', *Industrial Management & Data Systems*, vol. 112, no. 2, pp. 186–205.

Green Jr, KW, Zelbst, PJ, Meacham, J & Bhadauria, VS 2012b, 'Green supply chain management practices: impact on performance', *Supply Chain Management: An International Journal*, vol. 17, no. 3, pp. 290−305.

Gualandris, J & Kalchschmidt, M 2014, 'Customer pressure and innovativeness: their role in sustainable supply chain management', *Journal of Purchasing and Supply Management*, vol. 20, no. 2, pp. 92–103.

Gualandris, J & Kalchschmidt, M 2016, 'Developing environmental and social performance: the role of suppliers' sustainability and buyer-supplier trust', *International Journal of Production Research*, vol. 54, no. 8, pp. 2470–2486.

Gualandris, J, Golini, R & Kalchschmidt, M 2014, 'Do supply management and global sourcing matter for firm sustainability performance? An international study', *Supply Chain Management: An International Journal*, vol. 19, no. 3, pp. 258–274.

Gualandris, J, Klassen, RD, Vachon, S & Kalchschmidt, M 2015, 'Sustainable evaluation and verification in supply chains: aligning and leveraging accountability to stakeholders', *Journal of Operations Management*, vol. 38, pp. 1–13.

Gunasekaran, A, Subramanian, N & Rahman, S 2015, 'Supply chain resilience: role of complexities and strategies', *International Journal of Production Research*, vol. 53, no. 22, pp. 6809−6819.

Hahn, T, Figge, F, Pinkse, J & Preuss, L 2010, 'Trade-offs in corporate sustainability: you can't have your cake and eat it', *Business Strategy and the Environment*, vol. 19, no. 4, pp. 217–229.

Hair, J, Black, W, Babin, B & Anderson, R 2010, *Multivariate data analysis*, 7th edn, Pearson Prentice Hall International, Upper Saddle River, NJ.

Halldórsson, Á, Kotzab, H & Skjøtt-Larsen, T 2009, 'Supply chain management on the crossroad to sustainability: a blessing or a curse?', *Logistics Research*, vol. 1, no. 2, pp. 83–94.

Han, J, Chou, P, Chao, M & Wright, PM 2006, 'The HR competencies–HR effectiveness link: a study in Taiwanese high-tech companies', *Human Resource Management*, vol. 45, no. 3, pp. 391−406.

Hanson, WE, Creswell, JW, Clark, VLP, Petska, KS & Creswell, JD 2005, 'Mixed methods research designs in counseling psychology', *Journal of Counseling Psychology*, vol. 52, no. 2, pp. 224–235.

Harms, D, Hansen, EG & Schaltegger, S 2013, 'Strategies in sustainable supply chain management: an empirical investigation of large German companies', *Corporate Social Responsibility and Environmental Management*, vol. 20, no. 4, pp. 205–218.

Hart, SL 1997, 'Beyond greening: strategies for a sustainable world', *Harvard Business Review*, vol. 75, no. 1, pp. 66–76.

Hassini, E, Surti, C & Searcy, C 2012, 'A literature review and a case study of sustainable supply chains with a focus on metrics', *International Journal of Production Economics*, vol. 140, no. 1, pp. 69–82.

Helfat, CE & Peteraf, MA 2003, 'The dynamic resource-based view: capability lifecycles', *Strategic Management Journal*, vol. 24, no. 10, pp. 997–1010.

Helfat, CE & Peteraf, MA 2009, 'Understanding dynamic capabilities: progress along a developmental path', *Strategic Organization*, vol. 7, no. 1, pp. 91–102.

Helfat, CE & Winter, SG 2011, 'Untangling dynamic and operational capabilities: strategy for the (n)ever-changing world', *Strategic Management Journal*, vol. 32, no. 11, pp. 1243–1250.

Hendy, P 2016, *Supporting innovation and agility: regulation in the 21st Century*, Department of the Prime Minister and Cabinet, Australian Government, viewed 15 June 2016, <https://ministers.dpmc.gov.au/hendy/2016/supporting-innovation-and-agility-regulation-21st-century>.

Hermens, H 2014, 'Australian manufacturers can and should compete globally', *Manufacturers' Monthly*, 15 September, viewed 3 April 2016, <http://www.manmonthly.com.au/features/australian-manufacturers-can-and-should-compete-gl>.

Hitt, MA 2011, 'Relevance of strategic management theory and research for supply chain management', *Journal of Supply Chain Management*, vol. 47, no. 1, pp. 9–13.

Hoejmose, SU, Grosvold, J & Millington, A 2013, 'Socially responsible supply chains: power asymmetries and joint dependence', *Supply Chain Management: An International Journal*, vol. 18, no. 3, pp. 277–291.

Hoejmose, SU, Roehrich, JK & Grosvold, J 2014, 'Is doing more doing better? The relationship between responsible supply chain management and corporate reputation', *Industrial Marketing Management*, vol. 43, no. 1, pp. 77–90.

Hofmann, H, Busse, C, Bode, C & Henke, M 2014, 'Sustainability-related supply chain risks: conceptualization and management', *Business Strategy and the Environment*, vol. 23, no. 3, pp. 160–172.

Hofmann, KH, Theyel, G & Wood, CH 2012, 'Identifying firm capabilities as drivers of environmental management and sustainability practices – evidence from small and medium-sized manufacturers', *Business Strategy and the Environment*, vol. 21, no. 8, pp. 530–545.

Hollos, D, Blome, C & Foerstl, K 2012, 'Does sustainable supplier co-operation affect performance? Examining implications for the triple bottom line', *International Journal of Production Research*, vol. 50, no. 11, pp. 2968–2986.

Holt, D & Ghobadian, A 2009, 'An empirical study of green supply chain management practices amongst UK manufacturers', *Journal of Manufacturing Technology Management*, vol. 20, no. 7, pp. 933–956.

Hoyle, RH 1995, 'Structural equation modeling approach: basic concepts and fundamental issues', in RH Hoyle (ed.), *Structural equation modeling: concepts, issues, and applications*, Sage Publications, Thousand Oaks, CA, pp. 1–15.

Hsu, CC, Tan, KC, Zailani, SHM & Jayaraman, V 2013, 'Supply chain drivers that foster the development of green initiatives in an emerging economy', *International Journal of Operations & Production Management*, vol. 33, no. 6, pp. 656–688.

Hu, L & Bentler, PM 1995, 'Evaluating model fit', in RH Hoyle (ed.), *Structural equation modeling: concepts, issues, and applications*, Sage Publications, Thousand Oaks, CA, pp. 76–99.

Hu, L & Bentler, PM 1998, 'Fit indices in covariance structure modeling: sensitivity to underparameterized model misspecification', *Psychological Methods*, vol. 3, no. 4, pp. 424–453.

Hu, L & Bentler, PM 1999, 'Cutoff criteria for fit indexes in covariance structure analysis: conventional criteria versus new alternatives', *Structural Equation Modeling: A Multidisciplinary Journal*, vol. 6, no. 1, pp. 1–55.

Hu, L, Bentler, PM & Kano, Y 1992, 'Can test statistics in covariance structure analysis be trusted?', *Psychological Bulletin*, vol. 112, no. 2, pp. 351–362.

Hubbard, G 2009, 'Measuring organizational performance: beyond the triple bottom line', *Business Strategy and the Environment*, vol. 18, no. 3, pp. 177–191.

Hult, GTM, Ketchen Jr, DJ, Cavusgil, ST & Calantone, RJ 2006, 'Knowledge as a strategic resource in supply chains', *Journal of Operations Management*, vol. 24, no. 5, pp. 458–475.

Hung, SW, Chen, PC & Chung, CF 2014, 'Gaining or losing? The social capital perspective on supply chain members' knowledge sharing of green practices', *Technology Analysis & Strategic Management*, vol. 26, no. 2, pp. 189–206.

Huq, F, Chowdhury, I & Klassen, R 2016, 'Social management capabilities of multinational buying firms and their emerging market suppliers: an exploratory study of the clothing industry', *Journal of Operations Management*, vol. 46, pp. 19–37.

Hutchins, MJ & Sutherland, JW 2008, 'An exploration of measures of social sustainability and their application to supply chain decisions', *Journal of Cleaner Production*, vol. 16, no. 15, pp. 1688–1698.

Ignatius, A 2012, 'Captain planet', *Harvard Business Review*, vol. 90, no. 6, pp. 112–118.

Infrastructure Australia 2016, *Australian infrastructure plan: priorities and reforms for our nation's future*, Infrastructure Australia, viewed 22 July 2016, <http://infrastructureaustralia.gov.au/policy-publications/publications/files/Australian_Infrastructure_Plan.pdf>.

International Institute for Management Development (IMD) 2016, *IMD world competitiveness year book 2016*, IMD, viewed 4 April 2017, <https://www.imd.org/uupload/imd.website/wcc/scoreboard.pdf>.

Ionescu-Somers, A & Enders, A 2012, 'How Nestlé dealt with a social media campaign against it', *Financial Times*, 3 December, viewed 5 August 2014, <http://www.ft.com/intl/cms/s/0/90dbff8a-3aea-11e2-b3f0-00144feabdc0.html#axzz39TXX87tm>.

Ismail, HS & Sharifi, H 2006, 'A balanced approach to building agile supply chains', *International Journal of Physical Distribution & Logistics Management*, vol. 36, no. 6, pp. 431–444.

Ismail, HS, Poolton, J & Sharifi, H 2011, 'The role of agile strategic capabilities in achieving resilience in manufacturing-based small companies', *International Journal of Production Research*, vol. 49, no. 18, pp. 5469–5487.

Ivanov, D, Sokolov, B & Dolgui, A 2014, 'The ripple effect in supply chains: trade-off "efficiency-flexibility-resilience" in disruption management', *International Journal of Production Research*, vol. 52, no. 7, pp. 2154–2172.

Jack, EP, Powers, TL & Skinner, L 2010, 'Reverse logistics capabilities: antecedents and cost savings', *International Journal of Physical Distribution & Logistics Management*, vol. 40, no. 3, pp. 228–246.

Johnson, N, Elliott, D & Drake, P 2013, 'Exploring the role of social capital in facilitating supply chain resilience', *Supply Chain Management: An International Journal*, vol. 18, no. 3, pp. 324–336.

Johnson, RB & Onwuegbuzie, AJ 2004, 'Mixed methods research: a research paradigm whose time has come', *Educational Researcher*, vol. 33, no. 7, pp. 14–26.

Johnson, RB, Onwuegbuzie, AJ & Turner, LA 2007, 'Toward a definition of mixed methods research', *Journal of Mixed Methods Research*, vol. 1, no. 2, pp. 112–133.

Jöreskog, KG & Sörbom, D 1982, 'Recent developments in structural equation modeling', *Journal of Marketing Research*, vol. 19, no. 4, pp. 404–416.

Jüttner, U & Maklan, S 2011, 'Supply chain resilience in the global financial crisis: an empirical study', *Supply Chain Management: An International Journal*, vol. 16, no. 4, pp. 246–259.

Kaiser, HF 1974, 'An index of factorial simplicity', *Psychometrika*, vol. 39, no. 1, pp. 31–36.

Kalafatis, SP, Sarpong, S & Sharif, KJ 2005, 'An examination of the stability of operationalisations of multi-item marketing scales', *International Journal of Market Research,* vol. 47, no. 3, pp. 255–266.

Karjalainen, K & Moxham, C 2013, 'Focus on fairtrade: propositions for integrating fairtrade and supply chain management research', *Journal of Business Ethics,* vol. 116, no. 2, pp. 267–282.

Katkalo, VS, Pitelis, CN & Teece, DJ 2010, 'Introduction: on the nature and scope of dynamic capabilities', *Industrial and Corporate Change,* vol. 19, no. 4, pp. 1175–1186.

Keh, P, Rodhain, F, Meissonier, R & Llorca, V 2012, 'Financial performance, environmental compliance, and social outcomes: the three challenges of reverse logistics. Case study of IBM Montpellier', *Supply Chain Forum: An International Journal,* vol. 13, no. 3, pp. 26–38.

Ketchen Jr, DJ & Hult, GTM 2007, 'Bridging organization theory and supply chain management: the case of best value supply chains', *Journal of Operations Management,* vol. 25, no. 2, pp. 573–580.

Khan, AK & Pillania, RK 2008, 'Strategic sourcing for supply chain agility and firms' performance: a study of Indian manufacturing sector', *Management Decision,* vol. 46, no. 10, pp. 1508–1530.

Khan, AK, Bakkappa, B, Metri, BA & Sahay, B 2009, 'Impact of agile supply chains' delivery practices on firms' performance: cluster analysis and validation', *Supply Chain Management: An International Journal,* vol. 14, no. 1, pp. 41–48.

Khanna, M & Anton, WRQ 2002, 'Corporate environmental management: regulatory and market-based incentives', *Land Economics,* vol. 78, no. 4, pp. 539–558.

Kim, H-R, Lee, M, Lee, H-T & Kim, N-M 2010, 'Corporate social responsibility and employee-company identification', *Journal of Business Ethics,* vol. 95, no. 4, pp. 557–569.

Kim, J & Rhee, J 2012, 'An empirical study on the impact of critical success factors on the balanced scorecard performance in Korean green supply chain management enterprises', *International Journal of Production Research,* vol. 50, no. 9, pp. 2465–2483.

Kim, KH 2005, ' The relation among fit indexes, power, and sample size in structural equation modeling', *Structural Equation Modeling: A Multidisciplinary Journal,* vol. 12, no. 3, pp. 368–390.

Kim, M, Suresh, NC & Kocabasoglu-Hillmer, C 2013, 'An impact of manufacturing flexibility and technological dimensions of manufacturing strategy on improving supply chain responsiveness: business environment perspective', *International Journal of Production Research,* vol. 51, no. 18, pp. 5597–5611.

Kisperska-Moron, D & Swierczek, A 2009, 'The agile capabilities of Polish companies in the supply chain: an empirical study', *International Journal of Production Economics,* vol. 118, no. 1, pp. 217–224.

Klassen, RD & Vereecke, A 2012, 'Social issues in supply chains: capabilities link responsibility, risk (opportunity), and performance', *International Journal of Production Economics,* vol. 140, no. 1, pp. 103–115.

Kleindorfer, PR, Singhal, K & Van Wassenhove, LN 2005, 'Sustainable operations management', *Production and Operations Management,* vol. 14, no. 4, pp. 482–492.

Kline, P 1999, *The handbook of psychological testing,* 2nd edn, Routledge, London.

Kline, RB 2005, *Principles and practice of structural equation modeling,* 2nd edn, Guilford Press, New York.

Kline, RB 2010, *Principles and practice of structural equation modeling,* 3rd edn, Guilford Press, New York, viewed 21 July 2016, EBSCO Host.

Kogg, B & Mont, O 2012, 'Environmental and social responsibility in supply chains: the practise of choice and inter-organisational management', *Ecological Economics,* vol. 83, pp. 154–163.

Koplin, J, Seuring, S & Mesterharm, M 2007, 'Incorporating sustainability into supply management in the automotive industry – the case of the Volkswagen AG', *Journal of Cleaner Production,* vol. 15, no. 11, pp. 1053–1062.

Kortelainen, K 2008, 'Global supply chains and social requirements: case studies of labour condition auditing in the People's Republic of China', *Business Strategy and the Environment,* vol. 17, no. 7, pp. 431–443.

Krause, DR, Handfield, RB & Tyler, BB 2007, 'The relationships between supplier development, commitment, social capital accumulation and performance improvement', *Journal of Operations Management,* vol. 25, no. 2, pp. 528–545.

Krause, DR, Vachon, S & Klassen, RD 2009, 'Special topic forum on sustainable supply chain management: introduction and reflections on the role of purchasing management', *Journal of Supply Chain Management,* vol. 45, no. 4, pp. 18–25.

Kryger, A 2014, *Performance of manufacturing industry: a quick guide,* Department of Parliamentary Services, Commonwealth of Australia, viewed 15 December 2015, <http://parlinfo.aph.gov.au/parlInfo/download/library/prspub/3510841/upload_binary/3510841.pdf;fileType=application/pdf>.

Kumar, S, Teichman, S & Timpernagel, T 2012, 'A green supply chain is a requirement for profitability', *International Journal of Production Research,* vol. 50, no. 5, pp. 1278–1296.

Ladhari, R, Pons, F, Bressolles, G & Zins, M 2011, 'Culture and personal values: how they influence perceived service quality', *Journal of Business Research*, vol. 64, pp. 951–957.

Laine, EL & Laine, M 2009, 'Finnish world shops at a crossroads in the commercialized fair trade market', *Sustainable Development*, vol. 17, no. 5, pp. 274–283.

Lambert, DM & Cooper, MC 2000, 'Issues in supply chain management', *Industrial Marketing Management*, vol. 29, no. 1, pp. 65–83.

Lambert, DM, Cooper, MC & Pagh, JD 1998, 'Supply chain management: implementation issues and research opportunities', *The International Journal of Logistics Management*, vol. 9, no. 2, pp. 1–20.

Laosirihongthong, T, Adebanjo, D & Tan, KC 2013, 'Green supply chain management practices and performance', *Industrial Management & Data Systems*, vol. 113, no. 8, pp. 1088–1109.

Leana, CR & Van Buren, HJ 1999, 'Organizational social capital and employment practices', *Academy of Management Review*, vol. 24, no. 3, pp. 538–555.

Lee, CW, Kwon, IG & Severance, D 2007, 'Relationship between supply chain performance and degree of linkage among supplier, internal integration, and customer', *Supply Chain Management: An International Journal*, vol. 12, no. 6, pp. 444–452.

Lee, HL 2004, 'The triple-A supply chain', *Harvard Business Review*, vol. 82, no. 10, pp. 102–112.

Lee, HL 2010, 'Don't tweak your supply chain – rethink it end to end', *Harvard Business Review*, vol. 88, no. 10, pp. 62–69.

Lee, S & Jung, H 2016, 'The effects of corporate social responsibility on profitability: the moderating roles of differentiation and outside investment', *Management Decision*, vol. 54, no. 6, pp. 1383–1406.

Lee, SM, Kim, ST & Choi, D 2012, 'Green supply chain management and organizational performance', *Industrial Management & Data Systems*, vol. 112, no. 8, pp. 1148–1180.

Lee, SM, Rha, JS, Choi, D & Noh, Y 2013, 'Pressures affecting green supply chain performance', *Management Decision*, vol. 51, no. 8, pp. 1753–1768.

Lee, SY & Klassen, RD 2008, 'Drivers and enablers that foster environmental management capabilities in small- and medium-sized suppliers in supply chains', *Production and Operations Management*, vol. 17, no. 6, pp. 573–586.

Lei, M & Lomax, RG 2005, 'The effect of varying degrees of nonnormality in structural equation modeling', *Structural Equation Modeling: A Multidisciplinary Journal*, vol. 12, no. 1, pp. 1–27.

Leire, C & Mont, O 2010, 'The implementation of socially responsible purchasing', *Corporate Social Responsibility and Environmental Management,* vol. 17, no. 1, pp. 27–39.

Leung, S-O 2011, 'A comparison of psychometric properties and normality in 4-, 5-, 6-, and 11-point Likert scales', *Journal of Social Service Research,* vol. 37, no. 4, pp. 412–421.

Li, X, Chung, C, Goldsby, TJ & Holsapple, CW 2008, 'A unified model of supply chain agility: the work-design perspective', *The International Journal of Logistics Management,* vol. 19, no. 3, pp. 408–435.

Li, X, Goldsby, TJ & Holsapple, CW 2009, 'Supply chain agility: scale development', *The International Journal of Logistics Management,* vol. 20, no. 3, pp. 408–424.

Lin, CT, Chiu, H & Chu, PY 2006, 'Agility index in the supply chain', *International Journal of Production Economics,* vol. 100, no. 2, pp. 285–299.

Linton, JD, Klassen, RD & Jayaraman, V 2007, 'Sustainable supply chains: an introduction', *Journal of Operations Management,* vol. 25, no. 6, pp. 1075–1082.

Littig, B & Griessler, E 2005, 'Social sustainability: a catchword between political pragmatism and social theory', *International Journal of Sustainable Development,* vol. 8, no. 1/2, pp. 65–79.

Little, RJA 1988, 'A test of missing completely at random for multivariate data with missing values', *Journal of the American Statistical Association,* vol. 83, no. 404, pp. 1198–1202.

Liu, H, Ke, W, Wei, KK & Hua, Z 2012, 'The impact of IT capabilities on firm performance: the mediating roles of absorptive capacity and supply chain agility', *Decision Support Systems,* vol. 54, pp. 1452–1462.

Liu, Y, Srai, JS & Evans, S 2016, 'Environmental management: the role of supply chain capabilities in the auto sector', *Supply Chain Management: An International Journal,* vol. 21, no. 1, pp. 1–19.

Lo, SM 2014, 'Effects of supply chain position on the motivation and practices of firms going green', *International Journal of Operations & Production Management,* vol. 34, no. 1, pp. 93–114.

Lubin, DA & Esty, DC 2014, 'Bridging the sustainability gap', *MIT Sloan Management Review,* vol. 55, no. 4, pp. 18–21.

Luo, X & Bhattacharya, CB 2006, 'Corporate social responsibility, customer satisfaction, and market value', *Journal of Marketing,* vol. 70, no. 4, pp. 1–18.

MacCallum, RC, Browne, MW & Sugawara, HM 1996, 'Power analysis and determination of sample size for covariance structure modeling', *Psychological Methods,* vol. 1, no. 2, pp. 130–149.

MacKenzie, SB & Podsakoff, PM 2012, 'Common method bias in marketing: causes, mechanisms, and procedural remedies', *Journal of Retailing*, vol. 88, no. 4, pp. 542–555.

Mackey, J 2013, 'The kind of capitalist you want to be', *Harvard Business Review*, vol. 91, no. 1, p. 34.

Makadok, R 2001, 'Toward a synthesis of the resource-based and dynamic-capability views of rent creation', *Strategic Management Journal*, vol. 22, no. 5, pp. 387–401.

Malhotra, MK & Grover, V 1998, 'An assessment of survey research in POM: from constructs to theory', *Journal of Operations Management*, vol. 16, no. 4, pp. 407–425.

Malhotra, NK, Kim, SS & Patil, A 2006, 'Common method variance in IS research: a comparison of alternative approaches and a reanalysis of past research', *Management Science*, vol. 52, no. 12, pp. 1865–1883.

Malhotra, NK, Mukhopadhyay, S, Liu, X & Dash, S 2012, 'One, few or many? An integrated framework for identifying the items in measurement scales', *International Journal of Market Research*, vol. 54, no. 6, pp. 835–862.

Maloni, MJ & Brown, ME 2006, 'Corporate social responsibility in the supply chain: an application in the food industry', *Journal of Business Ethics*, vol. 68, no. 1, pp. 35–52.

Mamic, I 2005, 'Managing global supply chain: the sports footwear, apparel and retail sectors', *Journal of Business Ethics*, vol. 59, no. 1, pp. 81–100.

Mandal, S 2014, 'Supply chain resilience: a state-of-the-art review and research directions', *International Journal of Disaster Resilience in the Built Environment*, vol. 5, no. 4, pp. 427–453.

Mani, V, Agrawal, R & Sharma, V 2015, 'Social sustainability in the supply chain: analysis of enablers', *Management Research Review*, vol. 38, no. 9, pp. 1016–1042.

Mani, V, Gunasekaran, A, Papadopoulos, T, Hazen, B & Dubey, R 2016, 'Supply chain social sustainability for developing nations: evidence from India', *Resources, Conservation and Recycling*, vol. 111, pp. 42–52.

Manufacturing Australia 2015, *Manufacturing our future: the role of workplace reform in securing the next generation of Australian industrial employment*, Manufacturing Australia, viewed 2 April 2016, <http://www.manufacturingaustralia.com.au/assets/Uploads/151123-MA-Workplace-Productivity-Position.pdf>.

Mardia, KV 1970, 'Measures of multivariate skewness and kurtosis with applications', *Biometrika*, vol. 57, no. 3, pp. 519–530.

Mardia, KV 1974, 'Applications of some measures of multivariate skewness and kurtosis in testing normality and robustness studies', *Sankhyā: The Indian Journal of Statistics*, vol. 36, no. 2, pp. 115–128.

Margolis, JD, Elfenbein, HA & Walsh, JP 2007, *Does it pay to be good? A meta-analysis and redirection of research on the relationship between corporate social and financial performance*, working paper, Harvard Business School, Boston, MA.

Marshall, D, McCarthy, L, Heavey, C & McGrath, P 2015a, 'Environmental and social supply chain management sustainability practices: construct development and measurement', *Production Planning & Control*, vol. 26, no. 8, pp. 673–690.

Marshall, D, McCarthy, L, McGrath, P & Claudy, M 2015b, 'Going above and beyond: how sustainability culture and entrepreneurial orientation drive social sustainability supply chain practice adoption', *Supply Chain Management: An International Journal*, vol. 20, no. 4, pp. 434–454.

Matthews, RL & Marzec, PE 2012, 'Social capital, a theory for operations management: a systematic review of the evidence', *International Journal of Production Research*, vol. 50, no. 24, pp. 7081–7099.

Meade, AW, Watson, AM & Kroustalis, CM 2007, 'Assessing common methods bias in organizational research', *Paper presented at the 22nd annual meeting of the society for industrial and organizational psychology*, New York, pp. 1–10.

Mefford, RN 2011, 'The economic value of a sustainable supply chain', *Business and Society Review*, vol. 116, no. 1, pp. 109–143.

Meixell, MJ & Luoma, P 2015, 'Stakeholder pressure in sustainable supply chain management: a systematic review', *International Journal of Physical Distribution & Logistics Management*, vol. 45, no. 1/2, pp. 69–89.

Melnyk, SA, Closs, DJ, Griffis, SE, Zobel, CW & Macdonald, JR 2014, 'Understanding supply chain resilience', *Supply Chain Management Review*, vol. 18, no. 1, pp. 34–41.

Melnyk, SA, Lummus, RR, Vokurka, RJ, Burns, LJ & Sandor, J 2009, 'Mapping the future of supply chain management: a Delphi study', *International Journal of Production Research*, vol. 47, no. 16, pp. 4629–4653.

Melnyk, SA, Sroufe, RP & Calantone, R 2003, 'Assessing the impact of environmental management systems on corporate and environmental performance', *Journal of Operations Management*, vol. 21, pp. 329–351.

Mentzer, JT & Flint, DJ 1997, 'Validity in logistics research', *Journal of Business Logistics*, vol. 18, no. 1, pp. 199–216.

Mentzer, JT, DeWitt, W, Keebler, JS, Soonhoong, M, Nix, NW, Smith, CD & Zacharia, ZG 2001, 'Defining supply chain management', *Journal of Business Logistics*, vol. 22, no. 2, pp. 1–25.

Miemczyk, J, Johnsen, TE & Macquet, M 2012, 'Sustainable purchasing and supply management: a structured literature review of definitions and measures at the dyad, chain and network levels', *Supply Chain Management: An International Journal*, vol. 17, no. 5, pp. 478–496.

Min, S & Mentzer, JT 2004, 'Developing and measuring supply chain management concepts', *Journal of Business Logistics,* vol. 25, no. 1, pp. 63–99.

Min, S, Kim, SK & Chen, H 2008, 'Developing social identity and social capital for supply chain management', *Journal of Business Logistics,* vol. 29, no. 1, pp. 283–304.

Mishra, S & Suar, D 2010, 'Does corporate social responsibility influence firm performance of Indian companies?', *Journal of Business Ethics,* vol. 95, no. 4, pp. 571–601.

Moldan, B, Janoušková, S & Hák, T 2012, 'How to understand and measure environmental sustainability: indicators and targets', *Ecological Indicators,* vol. 17, pp. 4–13.

Morali, O & Searcy, C 2013, 'A review of sustainable supply chain management practices in Canada', *Journal of Business Ethics,* vol. 117, no. 3, pp. 635–658.

Morelli, J 2013, 'Environmental sustainability: a definition for environmental professionals', *Journal of Environmental Sustainability,* vol. 1, no. 1, pp. 1–9.

Muthén, B, Kaplan, D & Hollis, M 1987, 'On structural equation modeling with data that are not missing completely at random', *Psychometrika,* vol. 52, no. 3, pp. 431–462.

Mylan, J, Geels, F, Gee, S, McMeekin, A & Foster, C 2015, 'Eco-innovation and retailers in milk, beef and bread chains: enriching environmental supply chain management with insights from innovation studies', *Journal of Cleaner Production,* vol. 107, pp. 20–30.

Nagel, RN 1992, *21st century manufacturing enterprise strategy report,* Iacocca Institute Lehigh University, viewed 21 March 2015, <http://www.dtic.mil/dtic/tr/fulltext/u2/a257032.pdf>.

National Sustainability Council 2013, *Sustainable Australia report 2013: conversations with the future climate,* DSEWPaC, viewed 17 April 2016, <https://www.environment.gov.au/system/files/resources/e55f5f00-b5ed-4a77-b977-da3764da72e3/files/sustainable-report-full.pdf>.

Nederhof, AJ 1985, 'Methods of coping with social desirability bias: a review', *European Journal of Social Psychology,* vol. 15, no. 3, pp. 263–280.

Nespresso 2016, *Sustainability,* Nestlé Nespresso SA, viewed 3 November 2016, <https://www.nestle-nespresso.com/sustainability/the-positive-cup/coffee>.

Neuman, WL 2006, *Social research methods: qualitative and quantitative approaches,* 6th edn, Pearson/Allyn and Bacon, Boston, MA.

Ngai, EWT, Chau, DCK & Chan, TLA 2011, 'Information technology, operational, and management competencies for supply chain agility: findings from case studies', *Journal of Strategic Information Systems,* vol. 20, no. 3, pp. 232–249.

Nils-Ole, H, Edda, F, Evi, H & Larry, G 2015, 'Research on the phenomenon of supply chain resilience: a systematic review and paths for further investigation', *International Journal of Physical Distribution & Logistics Management*, vol. 45, no. 1/2, pp. 90–117.

Noar, SM 2003, 'The role of structural equation modeling in scale development', *Structural Equation Modeling: A Multidisciplinary Journal*, vol. 10, no. 4, pp. 622–647.

Nunnally, JC & Bernstein, IH 1994, *Psychometric theory*, 3rd edn, McGraw-Hill Inc., New York.

Nyaga, GN, Whipple, JM & Lynch, DF 2010, 'Examining supply chain relationships: do buyer and supplier perspectives on collaborative relationships differ?', *Journal of Operations Management*, vol. 28, no. 2, pp. 101–114.

Office of the Chief Economist 2015, *Australian industry report*, Department of Industry, Innovation and Science, Commonwealth of Australia, viewed 4 May 2016, <http://www.industry.gov.au/Office-of-the-Chief-Economist/Publications/Documents/AIR2015.pdf >.

Olinsky, A, Chen, S & Harlow, L 2003, 'The comparative efficacy of imputation methods for missing data in structural equation modeling', *European Journal of Operational Research*, vol. 151, no. 1, pp. 53–79.

Olsson, UH, Foss, T, Troye, SV & Howell, RD 2000, 'The performance of ML, GLS, and WLS estimation in structural equation modeling under conditions of misspecification and nonnormality', *Structural Equation Modeling: A Multidisciplinary Journal*, vol. 7, no. 4, pp. 557–595.

Organisation for Economic Co-operation and Development (OECD) 2016, *Guidelines for multinational enterprises*, OECD, viewed 21 July 2016, <http://www.oecd.org/corporate/mne/>.

Orlitzky, M, Schmidt, FL & Rynes, SL 2003, 'Corporate social and financial performance: a meta-analysis', *Organization Studies*, vol. 24, no. 3, pp. 403–441.

Ory, DT & Mokhtarian, PL 2010, 'The impact of non-normality, sample size and estimation technique on goodness-of-fit measures in structural equation modeling: evidence from ten empirical models of travel behavior', *Quality & Quantity*, vol. 44, no. 3, pp. 427–445.

Pagell, M & Shevchenko, A 2014, 'Why research in sustainable supply chain management should have no future', *Journal of Supply Chain Management*, vol. 50, no. 1, pp. 44–55.

Pagell, M & Wu, Z 2009, 'Building a more complete theory of sustainable supply chain management using case studies of 10 exemplars', *Journal of Supply Chain Management*, vol. 45, no. 2, pp. 37–56.

Pagell, M, Yang, CL, Krumwiede, DW & Sheu, C 2004, 'Does the competitive environment influence the efficacy of investments in environmental management?', *Journal of Supply Chain Management*, vol. 40, no. 2, pp. 30–39.

Park-Poaps, H & Rees, K 2010, 'Stakeholder forces of socially responsible supply chain management orientation', *Journal of Business Ethics*, vol. 92, no. 2, pp. 305–322.

Paulraj, A 2011, 'Understanding the relationships between internal resources and capabilities, sustainable supply management and organizational sustainability', *Journal of Supply Chain Management*, vol. 47, no. 1, pp. 19–37.

Pereira, CR, Christopher, M & Da Silva, AL 2014, 'Achieving supply chain resilience: the role of procurement', *Supply Chain Management: An International Journal*, vol. 19, no. 5/6, pp. 626–642.

Perrini, F, Russo, A & Tencati, A 2007, 'CSR strategies of SMEs and large firms. Evidence from Italy', *Journal of Business Ethics*, vol. 74, no. 3, pp. 285–300.

Petreski, B 2013, *Manufacturing industry innovation cooperative research centre*, The Australian Industry Group, viewed January 11, 2016, <http://www2.aigroup.com.au/pdf/Ai%20Group%20-%20Manufacturing%20Industry%20Innovation%20CRC%20-%20FINAL.pdf >.

Pettit, TJ, Croxton, KL & Fiksel, J 2013, 'Ensuring supply chain resilience: development and implementation of an assessment tool', *Journal of Business Logistics*, vol. 34, no. 1, pp. 46–76.

Pettit, TJ, Fiksel, J & Croxton, KL 2010, 'Ensuring supply chain resilience: development of a conceptual framework', *Journal of Business Logistics*, vol. 31, no. 1, pp. 1–21.

Podsakoff, PM, MacKenzie, SB, Lee, JY & Podsakoff, NP 2003, 'Common method biases in behavioral research: a critical review of the literature and recommended remedies', *Journal of Applied Psychology*, vol. 88, no. 5, pp. 879–903.

Ponis, ST & Koronis, E 2012, 'Supply chain resilience: definition of concept and its formative elements', *The Journal of Applied Business Research*, vol. 28, no. 5, pp. 921–930.

Ponomarov, SY & Holcomb, MC 2009, 'Understanding the concept of supply chain resilience', *The International Journal of Logistics Management*, vol. 20, no. 1, pp. 124–143.

Porritt, J 2004, 'Locating the government's bottom line', in A Henriques & J Richardson (eds), *The triple bottom line: does it all add up?*, Earthscan, London, pp. 59–69.

Porter, ME & Kramer, MR 2011, 'Creating shared value', *Harvard Business Review*, vol. 89, no. 1/2, pp. 62–77.

Prater, E, Biehl, M & Smith, MA 2001, 'International supply chain agility: tradeoffs between flexibility and uncertainty', *International Journal of Operations & Production Management,* vol. 21, no. 5/6, pp. 823–839.

Preacher, KJ & Hayes, AF 2008, 'Asymptotic and resampling strategies for assessing and comparing indirect effects in multiple mediator models', *Behavior Research Methods,* vol. 40, no. 3, pp. 879–891.

Prieto, IM & Easterby-Smith, M 2006, 'Dynamic capabilities and the role of organizational knowledge: an exploration', *European Journal of Information Systems,* vol. 15, no. 5, pp. 500–510.

Prime Minister's Manufacturing Taskforce 2012, *Report of the non-government members: smarter manufacturing for a smarter Australia*, Department of Industry, Innovation, Science, Research and Tertiary Education, Commonwealth of Australia, viewed 26 May 2013, <http://www.industry.gov.au/industry/manufacturing/Taskforce/Documents/SmarterManufacturing.pdf >.

Pullman, ME, Maloni, MJ & Carter, CR 2009, 'Food for thought: social versus environmental sustainability practices and performance outcomes', *Journal of Supply Chain Management,* vol. 45, no. 4, pp. 38–54.

Purvis, L, Spall, S, Naim, M & Spiegler, V 2016, 'Developing a resilient supply chain strategy during "boom"and "bust"', *Production Planning & Control,* vol. 27, no. 7–8, pp. 579–590.

Putnam, RD 1993, 'The prosperous community', *The American Prospect,* vol. 4, no. 13, pp. 35–42.

Qrunfleh, S & Tarafdar, M 2013, 'Lean and agile supply chain strategies and supply chain responsiveness: the role of strategic supplier partnership and postponement', *Supply Chain Management: An International Journal,* vol. 18, no. 6, pp. 571–582.

Raghunathan, TE 2004, 'What do we do with missing data? Some options for analysis of incomplete data', *Annual Review of Public Health,* vol. 25, pp. 99–117.

Rao, P & Holt, D 2005, 'Do green supply chains lead to competitiveness and economic performance?', *International Journal of Operations & Production Management,* vol. 25, no. 9, pp. 898–916.

Resilience Expert Advisory Group 2016, *Organisational resilience: good business guide*, Commonwealth of Australia, viewed 13 June 2016, <http://www.organisationalresilience.gov.au/resources/Documents/Organisational-Resilience-Good-Business-Guide.PDF>.

Reuter, C, Foerstl, K, Hartmann, E & Blome, C 2010, 'Sustainable global supplier management: the role of dynamic capabilities in achieving competitive advantage', *Journal of Supply Chain Management,* vol. 46, no. 2, pp. 45–63.

Richards, L & Morse, JM 2007, *Readme first for a user's guide to qualitative methods*, 2nd edn, Sage Publications, Thousand Oaks, CA.

Richards, L 2009, *Handling qualitatitve data: a practical guide*, 2nd edn, Sage Publications, London.

Roe, MJ 2001, 'The shareholder wealth maximization norm and industrial organization', *University of Pennsylvania Law Review*, vol. 149, no. 6, pp. 2063–2081.

Roh, JJ, Min, H & Hong, P 2011, 'A co-ordination theory approach to restructuring the supply chain: an empirical study from the focal company perspective', *International Journal of Production Research*, vol. 49, no. 15, pp. 4517–4541.

Rusinko, CA 2007, 'Green manufacturing: an evaluation of environmentally sustainable manufacturing practices and their impact on competitive outcomes', *IEEE Transactions on Engineering Management*, vol. 54, no. 3, pp. 445–454.

Sáenz, MJ & Revilla, E 2014, 'Creating more resilient supply chains', *MIT Sloan Management Review*, vol. 55, no. 4, pp. 22–24.

Sancha, C, Gimenez, C & Sierra, V 2016, 'Achieving a socially responsible supply chain through assessment and collaboration', *Journal of Cleaner Production*, vol. 112, pp. 1934–1947.

Sancha, C, Gimenez, C, Sierra, V & Kazeminia, A 2015, 'Does implementing social supplier development practices pay off?', *Supply Chain Management: An International Journal*, vol. 20, no. 4, pp. 389–403.

Santolaria, M, Oliver-Solà, J, Gasol, CM, Morales-Pinzón, T & Rieradevall, J 2011, 'Eco-design in innovation driven companies: perception, predictions and the main drivers of integration. The Spanish example', *Journal of Cleaner Production*, vol. 19, no. 12, pp. 1315–1323.

Sarkis, J 2001, 'Manufacturing's role in corporate environmental sustainability - concerns for the new millennium', *International Journal of Operations & Production Management*, vol. 21, no. 5/6, pp. 666–686.

Sarkis, J 2003, 'A strategic decision framework for green supply chain management', *Journal of Cleaner Production*, vol. 11, no. 4, pp. 397–409.

Sarkis, J, Gonzalez-Torre, P & Adenso-Diaz, B 2010, 'Stakeholder pressure and the adoption of environmental practices: the mediating effect of training', *Journal of Operations Management*, vol. 28, no. 2, pp. 163–176.

Sarkis, J, Helms, MM & Hervani, AA 2010, 'Reverse logistics and social sustainability', *Corporate Social Responsibility and Environmental Management*, vol. 17, no. 6, pp. 337–354.

Sarkis, J, Zhu, Q & Lai, KH 2011, 'An organizational theoretic review of green supply chain management literature', *International Journal of Production Economics,* vol. 130, no. 1, pp. 1–15.

Saunders, M, Lewis, P & Thornhill, A 2003, *Research methods for business students,* 3rd edn, Pearson Education Limited, New Delhi.

Savitz, AW & Weber, K 2013, *The triple bottom line: how today's best-run companies are achieving economic, social and environmental success—and how you can too,* Jossey-Bass, San Francisco, CA, viewed 21 December 2016, ProQuest ebrary.

Schaltegger, S & Burritt, R 2014, 'Measuring and managing sustainability performance of supply chains: review and sustainability supply chain management framework', *Supply Chain Management: An International Journal,* vol. 19, no. 3, pp. 232–241.

Scholten, K & Schilder, S 2015, 'The role of collaboration in supply chain resilience', *Supply Chain Management: An International Journal,* vol. 20, no. 4, pp. 471–484.

Scholten, K, Scott, PS & Fynes, B 2014, 'Mitigation processes – antecedents for building supply chain resilience', *Supply Chain Management: An International Journal,* vol. 19, no. 2, pp. 211–228.

Schumacker, R & Lomax, R 2004, *A beginner's guide to structural equation modeling,* 2nd edn, Lawrence Erlbaum Associates, Inc., Mahwah, NJ.

Sekaran, U 2006, *Research methods for business: a skill building approach,* 4th edn, John Wiley & Sons, New Delhi.

Seuring, S & Müller, M 2008a, 'From a literature review to a conceptual framework for sustainable supply chain management', *Journal of Cleaner Production,* vol. 16, no. 15, pp. 1699–1710.

Seuring, S & Müller, M 2008b, 'Core issues in sustainable supply chain management–a Delphi study', *Business Strategy and the Environment,* vol. 17, no. 8, pp. 455–466.

Seuring, S 2008, 'Assessing the rigor of case study research in supply chain management', *Supply Chain Management: An International Journal,* vol. 13, no. 2, pp. 128–137.

Shah, R & Goldstein, SM 2006, 'Use of structural equation modeling in operations management research: looking back and forward', *Journal of Operations Management,* vol. 24, no. 2, pp. 148–169.

Shao, X-F 2013, 'Supply chain characteristics and disruption mitigation capability: an empirical investigation in China', *International Journal of Logistics: Research & Applications,* vol. 16, no. 4, pp. 277–295.

Sharifi, H & Zhang, Z 2001, 'Agile manufacturing in practice: application of a methodology', *International Journal of Operations & Production Management,* vol. 21, no. 5/6, pp. 772–794.

Sharifi, H, Ismail, HS & Reid, I 2006, 'Achieving agility in supply chain through simultaneous "design of" and "design for" supply chain', *Journal of Manufacturing Technology Management*, vol. 17, no. 8, pp. 1078–1098.

Sharma, S & Henriques, I 2005, 'Stakeholder influences on sustainability practices in the Canadian forest products industry', *Strategic Management Journal*, vol. 26, no. 2, pp. 159–180.

Sharma, S & Ruud, A 2003, 'On the path to sustainability: integrating social dimensions into the research and practice of environmental management', *Business Strategy and the Environment*, vol. 12, no. 4, pp. 205–214.

Sheffi, Y & Rice, JB 2005, 'A supply chain view of the resilient enterprise', *MIT Sloan Management Review*, vol. 47, no. 1, pp. 41–48.

Sherehiy, B, Karwowski, W & Layer, JK 2007, 'A review of enterprise agility: concepts, frameworks, and attributes', *International Journal of Industrial Ergonomics*, vol. 37, no. 5, pp. 445–460.

Shi, VG, Koh, SCL, Baldwin, J & Cucchiella, F 2012, 'Natural resource based green supply chain management', *Supply Chain Management: An International Journal*, vol. 17, no. 1, pp. 54–67.

Simpson, D, Power, D & Samson, D 2007, 'Greening the automotive supply chain: a relationship perspective', *International Journal of Operations & Production Management*, vol. 27, no. 1, pp. 28–48.

Skjoett-Larsen, T 1999, 'Supply chain management: a new challenge for researchers and managers in logistics', *The International Journal of Logistics Management*, vol. 10, no. 2, pp. 41–54.

Somerville, J 2016, 'Economic agility requires upending our culture of “stability as success”', *Financial Review*, 29 February, viewed 14 June 2016, <http://www.afr.com/opinion/economic-agility-requires-upending-our-culture-of-stability-as-success-20160229-gn63wd>.

Song, L, Yang, J & Zhang, Y 2011, 'State-owned enterprises' outward investment and the structural reform in China', *China & World Economy*, vol. 19, no. 4, pp. 38–53.

Spiegler, VLM, Naim, MM & Wikner, J 2012, 'A control engineering approach to the assessment of supply chain resilience', *International Journal of Production Research*, vol. 50, no. 21, pp. 6162–6187.

Swafford, PM, Ghosh, S & Murthy, N 2006a, 'The antecedents of supply chain agility of a firm: scale development and model testing', *Journal of Operations Management*, vol. 24, no. 2, pp. 170–188.

Swafford, PM, Ghosh, S & Murthy, N 2006b, 'A framework for assessing value chain agility', *International Journal of Operations & Production Management*, vol. 26, no. 2, pp. 118–140.

Swafford, PM, Ghosh, S & Murthy, N 2008, 'Achieving supply chain agility through IT integration and flexibility', *International Journal of Production Economics*, vol. 116, no. 2, pp. 288–297.

Szolnoki, G 2013, 'A cross-national comparison of sustainability in the wine industry', *Journal of Cleaner Production*, vol. 53, pp. 243–251.

Tabachnick, BG & Fidell, LS 2007, *Using multivariate statistics*, 5th edn, Pearson/Allyn and Bacon, Boston, MA.

Tanaka, JS 1987, '"How big is big enough?": sample size and goodness of fit in structural equation models with latent variables', *Child Development*, vol. 58, no. 1, pp. 134–146.

Tate, WL & Bals, L 2016, 'Achieving shared triple bottom line (TBL) value creation: toward a social resource-based view (SRBV) of the firm', *Journal of Business Ethics*, doi: 10.1007/s10551-016-3344-y.

Tate, WL, Ellram, LM & Dooley, KJ 2012, 'Environmental purchasing and supplier management (EPSM): theory and practice', *Journal of Purchasing and Supply Management*, vol. 18, no. 3, pp. 173–188.

Tate, WL, Ellram, LM & Gölgeci, I 2013, 'Diffusion of environmental business practices: a network approach', *Journal of Purchasing and Supply Management*, vol. 19, no. 4, pp. 264–275.

Tate, WL, Ellram, LM & Kirchoff, JF 2010, 'Corporate social responsibility reports: a thematic analysis related to supply chain management', *Journal of Supply Chain Management*, vol. 46, no. 1, pp. 19–44.

Teece, DJ 2007, 'Explicating dynamic capabilities: the nature and microfoundations of (sustainable) enterprise performance', *Strategic Management Journal*, vol. 28, no. 13, pp. 1319–1350.

Teece, DJ, Pisano, G & Shuen, A 1997, 'Dynamic capabilities and strategic management', *Strategic Management Journal*, vol. 18, no. 7, pp. 509–533.

The Australian Industry Group 2016, *Training*, The Australian Industry Group, viewed 21 July 2016, < https://www.aigroup.com.au/workforce-development/training/>.

The Plastics and Chemicals Industries Association 2011, *Sustainability*, The Plastics and Chemical Industries Association, viewed 21 July 2016, <http://www.pacia.org.au/programs/sustainability>.

Thomas, E & Magilvy, JK 2011, 'Qualitative rigor or research validity in qualitative research', *Journal for Specialists in Pediatric Nursing*, vol. 16, no. 2, pp. 151–155.

Torugsa, NA, O'Donohue, W & Hecker, R 2013, 'Proactive CSR: an empirical analysis of the role of its economic, social and environmental dimensions on the association

between capabilities and performance', *Journal of Business Ethics*, vol. 115, no. 2, pp. 383–402.

Tourangeau, R, Conrad, FG, Couper, MP & Ye, C 2014, 'The effects of providing examples in survey questions', *Public Opinion Quarterly*, vol. 78, no. 1, pp. 100–125.

Trading Economics 2016, *Australia exports*, Trading Economics, viewed 19 May 2016, <http://www.tradingeconomics.com/australia/exports>.

Treiblmaier, H & Filzmoser, P 2010, 'Exploratory factor analysis revisited: how robust methods support the detection of hidden multivariate data structures in IS research', *Information & Management*, vol. 47, no. 4, pp. 197–207.

Tsai, W & Ghoshal, S 1998, 'Social capital and value creation: the role of intrafirm networks', *Academy of Management Journal*, vol. 41, no. 4, pp. 464–476.

Tse, YK, Zhang, M, Akhtar, P & MacBryde, J 2016, 'Embracing supply chain agility: an investigation in the electronics industry', *Supply Chain Management: An International Journal*, vol. 21, no. 1, pp. 140–156.

Tseng, M-L & Chiu, ASF 2013, 'Evaluating firm's green supply chain management in linguistic preferences', *Journal of Cleaner Production*, vol. 40, pp. 22–31.

Tseng, YH & Lin, CT 2011, 'Enhancing enterprise agility by deploying agile drivers, capabilities and providers', *Information Sciences*, vol. 181, no. 17, pp. 3693–3708.

Tsoulfas, GT & Pappis, CP 2006, 'Environmental principles applicable to supply chains design and operation', *Journal of Cleaner Production*, vol. 14, no. 18, pp. 1593–1602.

Tukamuhabwa, BR, Stevenson, M, Busby, J & Zorzini, M 2015, 'Supply chain resilience: definition, review and theoretical foundations for further study', *International Journal of Production Research*, vol. 53, no. 18, pp. 5592–5623.

Ullman, JB 2007, 'Structural equation modeling', in BG Tabachnick & LS Fidell (eds), *Using multivariate statistics*, 5th edn, Pearson/Allyn & Bacon, Boston, MA, pp.676–780.

United Nations Global Compact 2016, *UN global compact management model*, UN Global Compact, viewed 21 July 2016, <https://www.unglobalcompact.org/docs/news_events/9.1_news_archives/2010_06_17/UN_Global_Compact_Management_Model.pdf>.

Vachon, S & Klassen, RD 2006, 'Extending green practices across the supply chain: the impact of upstream and downstream integration', *International Journal of Operations & Production Management*, vol. 26, no. 7, pp. 795–821.

Vachon, S & Klassen, RD 2007, 'Supply chain management and environmental technologies: the role of integration', *International Journal of Production Research*, vol. 45, no. 2, pp. 401–423.

Vachon, S & Klassen, RD 2008, 'Environmental management and manufacturing performance: the role of collaboration in the supply chain', *International Journal of Production Economics,* vol. 111, no. 2, pp. 299–315.

Valiente, JMA, Ayerbe, CG & Figueras, MS 2012, 'Social responsibility practices and evaluation of corporate social performance', *Journal of Cleaner Production,* vol. 35, pp. 25–38.

Vallance, S, Perkins, HC & Dixon, JE 2011, 'What is social sustainability? A clarification of concepts', *Geoforum,* vol. 42, no. 3, pp. 342–348.

van Hoek, RI, Harrison, A & Christopher, M 2001, 'Measuring agile capabilities in the supply chain', *International Journal of Operations & Production Management,* vol. 21, no. 1/2, pp. 126–147.

Vandenberg, RJ & Lance, CE 2000, 'A review and synthesis of the measurement invariance literature: suggestions, practices, and recommendations for organizational research', *Organizational Research Methods,* vol. 3, no. 1, pp. 4–70.

Varsei, M, Soosay, C, Fahimnia, B & Sarkis, J 2014, 'Framing sustainability performance of supply chains with multidimensional indicators', *Supply Chain Management: An International Journal,* vol. 19, no. 3, pp. 242–257.

Vasileiou, K & Morris, J 2006, 'The sustainability of the supply chain for fresh potatoes in Britain', *Supply Chain Management: An International Journal,* vol. 11, no. 4, pp. 317–327.

Vázquez-Bustelo, D, Avella, L & Fernández, E 2007, 'Agility drivers, enablers and outcomes: empirical test of an integrated agile manufacturing model', *International Journal of Operations & Production Management,* vol. 27, no. 12, pp. 1303–1332.

Vermeulen, WJ & Seuring, S 2009, 'Sustainability through the market – the impacts of sustainable supply chain management: introduction', *Sustainable Development,* vol. 17, no. 5, pp. 269–273.

Villena, VH, Revilla, E & Choi, TY 2011, 'The dark side of buyer-supplier relationships: a social capital perspective', *Journal of Operations Management,* vol. 29, no. 6, pp. 561–576.

Vinodh, S, Prakash, NH & Selvan, KE 2011, 'Evaluation of agility in supply chains using fuzzy association rules mining', *International Journal of Production Research,* vol. 49, no. 22, pp. 6651–6661.

Wang, CL & Ahmed, PK 2007, 'Dynamic capabilities: a review and research agenda', *International Journal of Management Reviews,* vol. 9, no. 1, pp. 31–51.

Weijters, B & Baumgartner, H 2012, 'Misresponse to reversed and negated items in surveys: a review', *Journal of Marketing Research,* vol. 49, no. 5, pp. 737–747.

Welford, R & Frost, S 2006, 'Corporate social responsibility in Asian supply chains', *Corporate Social Responsibility and Environmental Management*, vol. 13, no. 3, pp. 166–176.

Welford, R 1997, *Hijacking environmentalism: corporate responses to sustainable development*, Routledge, New York, viewed 2 December 2016, <https://books-google-com-au.access.library.unisa.edu.au/books?hl=en&lr=&id=sjkAAgAAQBAJ&oi=fnd&pg=PP1&dq=welford+1997&ots=tpmB-C3gYY&sig=BwcjeXaFwhRcxqLGkyhccfc5Y3I#v=onepage&q=welford%201997&f=false>.

Wieland, A & Wallenburg, CM 2012, 'Dealing with supply chain risks: linking risk management practices and strategies to performance', *International Journal of Physical Distribution & Logistics Management*, vol. 42, no. 10, pp. 887–905.

Wieland, A & Wallenburg, CM 2013, 'The influence of relational competencies on supply chain resilience: a relational view', *International Journal of Physical Distribution & Logistics Management*, vol. 43, no. 4, pp. 300–320.

Wieland, A 2013, 'Selecting the right supply chain based on risks', *Journal of Manufacturing Technology Management*, vol. 24, no. 5, pp. 652–668.

Winston, A 2014, 'Resilience in a hotter world', *Harvard Business Review*, vol. 92, no. 4, pp. 56–64.

Winter, M & Knemeyer, AM 2013, 'Exploring the integration of sustainability and supply chain management: current state and opportunities for future inquiry', *International Journal of Physical Distribution & Logistics Management*, vol. 43, no. 1, pp. 18–38.

Winter, SG 2000, 'The satisficing principle in capability learning', *Strategic Management Journal*, vol. 21, no. 10/11, pp. 981–996.

Wittstruck, D & Teuteberg, F 2012, 'Understanding the success factors of sustainable supply chain management: empirical evidence from the electrics and electronics industry', *Corporate Social Responsibility and Environmental Management*, vol. 19, no. 3, pp. 141–158.

Wolf, J 2014, 'The relationship between sustainable supply chain management, stakeholder pressure and corporate sustainability performance', *Journal of Business Ethics*, vol. 119, no. 3, pp. 317–328.

Wong, CWY 2013, 'Leveraging environmental information integration to enable environmental management capability and performance', *Journal of Supply Chain Management*, vol. 49, no. 2, pp. 114–136.

Wood, DJ 2010, 'Measuring corporate social performance: a review', *International Journal of Management Reviews*, vol. 12, no. 1, pp. 50–84.

World Commission on Environment and Development (WCED) 1987, *Our Common Future*, Oxford University Press, Oxford.

Wu, AD & Zumbo, BD 2008, 'Understanding and using mediators and moderators', *Social Indicators Research,* vol. 87, pp. 367–392.

Wu, Z & Pagell, M 2011, 'Balancing priorities: decision-making in sustainable supply chain management', *Journal of Operations Management,* vol. 29, no. 6, pp. 577–590.

Xie, Y & Breen, L 2012, 'Greening community pharmaceutical supply chain in UK: a cross boundary approach', *Supply Chain Management: An International Journal,* vol. 17, no. 1, pp. 40–53.

Xu, L & Beamon, BM 2006, 'Supply chain coordination and cooperation mechanisms: an attribute-based approach', *Journal of Supply Chain Management,* vol. 42, no. 1, pp. 4–12.

Yakovleva, N, Sarkis, J & Sloan, T 2012, 'Sustainable benchmarking of supply chains: the case of the food industry', *International Journal of Production Research,* vol. 50, no. 5, pp. 1297–1317.

Yang, J 2014, 'Supply chain agility: securing performance for Chinese manufacturers', *International Journal of Production Economics,* vol. 150, pp. 104–113.

Yauch, CA 2011, 'Measuring agility as a performance outcome', *Journal of Manufacturing Technology Management,* vol. 22, no. 3, pp. 384–404.

Yawar, SA & Seuring, S 2015, 'Management of social issues in supply chains: a literature review exploring social issues, actions and performance outcomes', *Journal of Business Ethics,* doi:10.1007/s10551-015-2719-9.

Yong, AG & Pearce, S 2013, 'A beginner's guide to factor analysis: focusing on exploratory factor analysis', *Tutorials in Quantitative Methods for Psychology,* vol. 9, no. 2, pp. 79–94.

Yuan, K-H, Marshall, LL & Bentler, PM 2002, 'A unified approach to exploratory factor analysis with missing data, nonnormal data, and in the presence of outliers', *Psychometrika,* vol. 67, no. 1, pp. 95–121.

Yusuf, YY & Adeleye, EO 2002, 'A comparative study of lean and agile manufacturing with a related survey of current practices in the UK', *International Journal of Production Research,* vol. 40, no. 17, pp. 4545–4562.

Yusuf, YY, Gunasekaran, A, Adeleye, EO & Sivayoganathan, K 2004, 'Agile supply chain capabilities: determinants of competitive objectives', *European Journal of Operational Research,* vol. 159, no. 2, pp. 379–392.

Yusuf, YY, Gunasekaran, A, Musa, A, Dauda, M, El-Berishy, NM & Cang, S 2014a, 'A relational study of supply chain agility, competitiveness and business performance in

the oil and gas industry', *International Journal of Production Economics*, vol. 147, pp. 531–543.

Yusuf, YY, Gunasekaran, A, Musa, A, El-Berishy, NM, Abubakar, T & Ambursa, HM 2013, 'The UK oil and gas supply chains: an empirical analysis of adoption of sustainable measures and performance outcomes', *International Journal of Production Economics*, vol. 146, no. 2, pp. 501–514.

Yusuf, YY, Musa, A, Dauda, M, El-Berishy, NM, Kovvuri, D & Abubakar, T 2014b, 'A study of the diffusion of agility and cluster competitiveness in the oil and gas supply chains', *International Journal of Production Economics*, vol. 147, pp. 498–513.

Zacharia, ZG, Nix, NW & Lusch, RF 2009, 'An analysis of supply chain collaborations and their effect on performance outcomes', *Journal of Business Logistics*, vol. 30, no. 2, pp. 101–123.

Zailani, S, Jeyaraman, K, Vengadasan, G & Premkumar, R 2012, 'Sustainable supply chain management (SSCM) in Malaysia: a survey', *International Journal of Production Economics*, vol. 140, no. 1, pp. 330–340.

Zhao, X, Huo, B, Selen, W & Yeung, JHY 2011, 'The impact of internal integration and relationship commitment on external integration', *Journal of Operations Management*, vol. 29, no. 1, pp. 17–32.

Zhu, Q & Sarkis, J 2006, 'An inter-sectoral comparison of green supply chain management in China: drivers and practices', *Journal of Cleaner Production*, vol. 14, no. 5, pp. 472–486.

Zhu, Q, Sarkis, J & Geng, Y 2005, 'Green supply chain management in China: pressures, practices and performance', *International Journal of Operations & Production Management*, vol. 25, no. 5, pp. 449–468.

Zhu, Q, Sarkis, J & Lai, KH 2007, 'Green supply chain management: pressures, practices and performance within the Chinese automobile industry', *Journal of Cleaner Production*, vol. 15, no. 11, pp. 1041–1052.

Zhu, Q, Sarkis, J & Lai, KH 2012, 'Green supply chain management innovation diffusion and its relationship to organizational improvement: an ecological modernization perspective', *Journal of Engineering and Technology Management*, vol. 29, no. 1, pp. 168–185.

Zhu, Q, Sarkis, J & Lai, KH 2013, 'Institutional-based antecedents and performance outcomes of internal and external green supply chain management practices', *Journal of Purchasing and Supply Management*, vol. 19, no. 2, pp. 106–117.

Zhu, Q, Sarkis, J, Lai, KH & Geng, Y 2008, 'The role of organizational size in the adoption of green supply chain management practices in China', *Corporate Social Responsibility and Environmental Management*, vol. 15, no. 6, pp. 322–337.

Zsidisin, GA & Siferd, SP 2001, 'Environmental purchasing: a framework for theory development', *European Journal of Purchasing & Supply Management*, vol. 7, no. 1, pp. 61–73.

Zsidisin, GA & Wagner, SM 2010, 'Do perceptions become reality? The moderating role of supply chain resiliency on disruption occurrence', *Journal of Business Logistics*, vol. 31, no. 2, pp. 1–20.

Appendix A Ethics approval

Dear Applicant

Re: Ethics protocol "A dynamic capability approach to sustainable supply chains: An investigation of agility and resilience in the Australian manufacturing industry" (Application ID: 0000033573)

Thank you for submitting your ethics protocol for consideration. Your protocol has been considered by the E1 Committee Review Group.

I am pleased to advise that your protocol has been granted ethics approval and meets the requirements of the National Statement on Ethical Conduct in Human Research. Please note that the E1 Committee Review Group's decision will be reported to the next meeting of the Human Research Ethics Committee for endorsement.

Please regard this email as formal notification of approval.

Ethics approval is always made on the basis of a number of conditions detailed at http://www.unisa.edu.au/res/forms/docs/humanresearchethics_conditions.doc; it is important that you are familiar with, and abide by, these conditions. It is also essential that you conduct all research according to UniSA guidelines, which can be found at http://www.unisa.edu.au/res/ethics/default.asp

Please note, if your project is a clinical trial you are required to register it in a publicly accessible trials registry prior to enrolment of the first participant (e.g., Australian New Zealand Clinical Trials Registry http://www.anzctr.org.au/) as a condition of ethics approval.

Best wishes for your research.

Executive Officer

UniSA's Human Research Ethics Committee

CRICOS provider number 00121B

This is an automated email and cannot be replied to. Please direct your query to ethics@unisa.edu.au.

Dear Samudi
Thank you for submitting an Amendment Request for your Ethics Protocol 0000033573. Your request has been forwarded to the Chair of the University's Human Research Ethics Committee, who will assess this within 5 working days. Please contact humanethics@unisa.edu.au if you have not received an update within this timeframe.
Kind regards
Abbie
Abbie Cawley
Ethics and Integrity Support Officer
University of South Australia | Mawson Lakes Campus | Mawson Lakes SA 5095
GPO Box 2471 | Adelaide | South Australia 5001
E-mail: Abbie.Cawley@unisa.edu.au
Ph: +61 8 8302 6330| Fax: +61 8 8302 3921

Internal Post Code - MLK-29
CRICOS Provider #: 00121B

This email is intended solely for the use of the addressee and may contain information that is confidential or privileged.
If you receive this email in error please notify the sender and delete the email immediately.

Appendix B Invitation letter used to recruit participants for interviews



Elton Mayo Building,
City West campus, North Terrace
GPO Box 2471, Adelaide, SA 5001
Tel: (+61) 8 830 20524
Fax: (+61) 8 830 20512
Email: mgn.enquiries@unisa.edu.au

Name and address

Dear [name of the participant]

Re: Invitation to participate in a research study on sustainable supply chains for the Australian manufacturing industry

I am Samudi Perera, a PhD candidate undertaking a research project at the UniSA Business School. My PhD research involves investigating the factors impacting sustainability in Australian manufacturing supply chains. While the manufacturing industry has been facing various transitional changes and decline over the past few decades, there are additional pressures on this industry to embrace more sustainable production systems, processes, products and practices in Australia in order to remain competitive. These can be achieved through the integrated efforts of firms at the supply chain level. My study explores how firm agility and resilience affect environmental, social and economic sustainability.

The findings from this study will provide theoretical and practical implications for achieving a more sustainable supply chain.

With this letter, I am inviting you to participate in an interview session in this project. The objective of the interview is to discuss your firm and supply chain practices in responding to market changes and achieving sustainability in your supply chain. The interview will take approximately an hour to complete and will be audio-recorded with your permission. All the interview information will be treated as strictly confidential. Please refer to the Participant's Information Sheet attached to this email for further details.

Your valuable opinions and information will be beneficial to accomplishing our research objectives and will be used to determine the questions for a survey of

companies that represent the supply chain of the Australian manufacturing industry. If you are willing to participate in an interview, please reply to this email by suggesting a convenient date and time, preferably in October 2014. Your referral to potential interviewees who are knowledgeable about the business environment and supply chain practices (preferably a managerial person) will also be greatly appreciated.

Should you have any questions regarding this study, or would like additional information about participation, kindly contact me on samudi.perera@mymail.unisa.edu.au or +61 8 8302 7026. You may also contact my supervisors as follows:

Associate Professor Claudine Soosay
Tel : +61 8 8302 0634
Email: Claudine.soosay@unisa.edu.au

Dr. Sukhbir Sandhu
Tel : +61 8 830 20735
Email: Sukhbir.Sandhu@unisa.edu.au

Thank you for your interest in this study.

Yours truly,

Samudi Perera
PhD Scholar
School of Management,
University of South Australia
Elton Mayo Building, EM4-21
City West Campus, North Terrace
GPO Box 2471, Adelaide 5001
Australia
Tel : +61 8 8302 7026
Email : samudi.perera@mymail.unisa.edu.au

Appendix C E-mail invitation to survey participants

Invitation Email (Survey)

Dear Sir/Madam,

RE: Invitation to Participate in a Research Study

I am a PhD candidate at the School of Management, University of South Australia Business School. My PhD research involves investigating dynamic capabilities for sustainable supply chains in the Australian manufacturing industry.

I am inviting you to participate in this research study by completing an anonymous online questionnaire survey. This survey will take approximately 15 minutes to complete the questionnaire. Click on the following link to access the questionnaire

[web link to the survey appear here]

Or copy and paste the URL below into your internet browser

[Web address of the survey appear here]

This study explores how firm agility and resilience affect environmental, social and economic sustainability. Your valuable opinions and information will contribute to advance the knowledge in the supply chain area and provide understandings of the behaviour of supply chains in the Australian manufacturing industry.

Participation in this study is voluntary. You can leave any questions unanswered and withdraw your participation at any time. There are no known or anticipated risks from participating in this study. Please refer to the Participant's Information Sheet attached to this e-mail for further details.

Should you have any questions about this study, or would like additional information about participation you can contact me by email at *samudi.perera@mymail.unisa.edu.au*. You can also contact my supervisors
A/ Professor Claudine Soosay on Claudine.Soosay@unisa.edu.au
Dr Sukhbir Sandhu on sukhbir.sandhu@unisa.edu.au

Thank you in advance for your interest and assistance with this research.

Yours truly,

Samudi Perera
PhD Scholar
School of Management
City West Campus, North Terrace
Elton Mayo Building EM 4-21
GPO Box 2471, Adelaide 5001
Australia
Phone: 0404527291
Email: samudi.perera@mymail.unisa.edu.au

Appendix D Information sheet for interviewees



Elton Mayo Building,
City West campus, North Terrace
GPO Box 2471, Adelaide, SA 5001
Tel: (+61) 8 830 20524
Fax: (+61) 8 830 20512
Email: mgn.enquiries@unisa.edu.au

INFORMATION SHEET

'A dynamic capability approach to sustainable supply chains: an investigation of agility and resilience in the Australian manufacturing industry'

Researcher:
Samudi Perera
PhD Candidate,
EM 4-21, City West Campus
School of Management
University of South Australia
North Terrace, GPO 2471,
Adelaide SA 5001
Tel: +61 8 8302 7026
Mobile: +61 4 0452 7291
Fax: +61 8 8302 0512
Email: samudi.perera@mymail.unisa.edu.au

Supervisors:
Associate Professor Claudine Soosay
EM 4-30, City West Campus
School of Management
University of South Australia
North Terrace, GPO 2471,
Adelaide SA 5001
Tel: +61 8 8302 0634
Fax: +61 8 8302 0512
E-mail: Claudine.soosay@unisa.edu.au

Dr Sukhbir Sandhu
EM 4-31, City West Campus
School of Management
University of South Australia
North Terrace, GPO 2471,
Adelaide SA 5001
Tel: +61 8 830 20735
Fax: +61 8 8302 0512
E-mail: Sukhbir.Sandhu@unisa.edu.au

Dear [name of the participant],

Thank you very much for taking part in this research project. Following is a brief of the information about this study and procedure for your consideration.

Project Overview

This research investigates the factors impacting sustainability in Australian manufacturing supply chains. While the manufacturing industry has been facing various transitional changes and decline over the past few decades, there are additional pressures on this industry to embrace more sustainable production systems, processes, products and practices in Australia in order to remain competitive. These can be achieved through the integrated efforts of firms at the supply chain level. Underpinned by the dynamic capability view, this study explores how firm agility and resilience affect environmental, social and economic sustainability. Agility refers to the ability to recognise and address market changes quickly by reconfiguring supply chain resources while resilience is the ability to recover to a favourable state after experiencing an unexpected change.

The findings from this study will provide theoretical and practical implications for achieving a more sustainable supply chain.

Participation procedure

The first phase of the study involves interview with managers or owners of businesses. The interview will last for approximately 60 minutes. The discussion requires knowledge of the business environment, sustainability practices and the engagement of partner firms in the supply chain. This interview will be audio-recorded using a digital recorder for transcription purposes, with your permission. A copy of the interview transcript will be available for your review upon request.

Your participation will be voluntary. Your truthful information is important for the success of this research project. You can withdraw your participation at any time. Your contributions will be removed from the project upon your request.

Benefits and risks

The findings will bring valuable insights to the industry by considering the attributes of agility and resilience that companies should focus on in attaining a sustainable supply chain. Based on the empirical findings, this study will strengthen the present knowledge in the field of sustainable supply chains. There are no foreseeable risks associated with your participation in this study. Should you have any negative feelings or implications, you have the right to withdraw at any time without affecting your status now or in the future.

Confidentiality / Anonymity

- The study will not ask for names of the participants.
- No individual identity or organisation name will be revealed in the study.
- The records of the interview will be treated with strict confidentiality and can only be accessed by the researcher and her PhD supervisors. The researcher will code all the data and remove all the identity material when storing data.
- No individual demographic data or information will be revealed or reported anywhere in the final report or in any other publication. Aggregate demographic data will be used to describe the participants in greater detail, where applicable.
- All data, including back-ups, will be securely stored in locked cabinets at the office of Samudi Perera, EM4-21, City West Campus, North Terrace, University of South Australia. Data will be stored for five years in accordance with the University of South Australia codes of conduct.
- All records containing personal information will remain confidential and no information which could lead to the identification of any individual will be released, unless required by law.

Outcome / Publication of results

The outcomes of this study will be in the forms of a PhD thesis, conference proceedings and scholarly journal articles. All information will be treated in confidentiality and anonymity is guaranteed in all these publications.

Consent

If you decide to take part, you will be asked to sign a consent form before the interview begins.

Feedback

You can receive a summary of the interview results once data have been analysed. Should you wish to have a copy of the results, please contact the primary investigator on +61 8 8302 7026 or samudi.perera@mymail.unisa.edu.au.

Concerns/Complaints

This research study has been approved by the University of South Australia's Human Research Ethics Committee. If you have any concerns about the nature and/or conduct of this study, please contact the executive officer of the ethics committee, Ms. Vicki Allen:
Tel: +61 8 8302 3118; Email: Vicki.allen@unisa.edu.au.

THANK YOU FOR YOUR TIME AND COOPERATION.

Appendix E Information sheet for survey participants



Elton Mayo Building,
City West campus, North Terrace
GPO Box 2471, Adelaide, SA 5001
Tel: (+61) 8 830 20524
Fax: (+61) 8 830 20512
Email: mgn.enquiries@unisa.edu.au

INFORMATION SHEET

'A dynamic capability approach to sustainable supply chains: an investigation of agility and resilience in the Australian manufacturing industry'

Researcher:
Samudi Perera
PhD Candidate,
EM 4-21, City West Campus
School of Management
University of South Australia
North Terrace, GPO 2471,
Adelaide SA 5001
Tel: +61 8 8302 7026
Mobile: +61 4 0452 7291
Fax: +61 8 8302 0512
Email: samudi.perera@mymail.unisa.edu.au

Supervisors:
Associate Professor Claudine Soosay
EM 4-30, City West Campus
School of Management
University of South Australia
North Terrace, GPO 2471,
Adelaide SA 5001
Tel: +61 8 8302 0634
Fax: +61 8 8302 0512
E-mail: Claudine.soosay@unisa.edu.au

Dr Sukhbir Sandhu
EM 4-31, City West Campus
School of Management
University of South Australia
North Terrace, GPO 2471,
Adelaide SA 5001
Tel: +61 8 830 20735
Fax: +61 8 8302 0512
E-mail: Sukhbir.Sandhu@unisa.edu.au

Dear participant,

Thank you very much for taking part in this research project. Following is a brief of the information about this study and procedure for your consideration.

Project Overview

This research investigates the factors impacting sustainability in Australian manufacturing supply chains. While the manufacturing industry has been facing various transitional changes and decline over the past few decades, there are additional pressures on this industry to embrace more sustainable production systems, processes, products and practices in Australia in order to remain competitive. These can be achieved through the integrated efforts of firms at the supply chain level. Underpinned by the dynamic capability view, this study explores how firm agility and resilience affect environmental, social and economic sustainability. Agility refers to the ability to recognise and address market changes quickly by reconfiguring supply chain resources, while resilience is the ability to recover to a favourable state after experiencing an unexpected change.

The findings from this study will provide theoretical and practical implications for achieving a more sustainable supply chain.

Participation procedure

You can participate in this study by completing the online questionnaire. Your participation is voluntary. The completion of a questionnaire will approximately take 15 minutes and will require an understanding of the supply chain practices and the engagement of partner firms in the supply chain. The authentic information is important for the success of this research project. You may withdraw from the study at any point while completing the survey, without consequences of any kind. Once you submit you survey, we are unable to remove your response as it will be impossible to identify your individual data.

Benefits and risks

The findings will bring valuable insights to the industry by considering the attributes of agility and resilience that companies should focus on, in attaining a sustainable supply chain. Based on these empirical evidences, this study will strengthen the present knowledge in sustainable supply chain discipline. There are no foreseeable risks associated with your participation in this study. Should you have any negative feelings or implications, you have the right to exit the survey and withdraw participation at any point before submitting your responses.

Confidentiality / Anonymity

- The survey will not ask for names of the participants.
- No individual identity or organisation name will be revealed in the study.
- The data will be treated with strict confidentiality and can only be accessed by the researcher and her PhD supervisors.
- The researcher will code all the data and take every care to remove responses from any identifying material as early as possible. Likewise, individuals' responses will be kept confidential by the researcher and not be identified in the reporting of the research. However, the researcher cannot guarantee the confidentiality or anonymity of material transferred by email or the internet.
- All data including back-ups will be securely stored in locked cabinets in cabinets at the office of Samudi Perera, EM4-21, City West Campus, North Terrace, University of South Australia. Data will be stored for five years in accordance with the University of South Australia codes of conduct.
- No individual demographic data or information will be revealed or reported anywhere in the final report or in any other publication. Aggregate demographic data will be used to describe the participants in greater detail, where applicable.
- All records containing personal information will remain confidential and no information which could lead to the identification of any individual will be released, unless required by law.

Outcome / Publication of results

The outcomes of this study will be in the forms of a PhD thesis, conference proceedings and scholarly journal articles. All information will be treated in confidentiality and anonymity is guaranteed in all these publications.

Consent

By deciding to complete the survey, you are voluntarily agreeing to participate.

Feedback

You can receive a summary of the survey results once data have been analysed. Should you wish to have a copy of the results, please contact the primary investigator on +61 8 8302 7026 or samudi.perera@mymail.unisa.edu.au.

Concerns/Complaints

This research study has been approved by the human research ethics committee of the University of South Australia. If you have any concerns about the nature and/or conduct of this study, please contact the executive officer of the ethics committee, Ms. Vicki Allen:
Tel: +61 8 8302 3118; Email: Vicki.allen@unisa.edu.au.

THANK YOU FOR YOUR TIME AND COOPERATION.

Appendix F Interview protocol

1. How does your company detect market changes/information?

   How does the supply chain function of your organisation detect market changes?
   Types of demand and supply
   a. Networking with others
   b. Information shared
   c. Integrated business processes (procurement, sales, inventory, production…)
   d. Overview of market changes that you encounter

2. What are the types of processes that you undertake in relation to the supply chain function to respond to the changes you mentioned earlier?
   a. Organisational and managerial processes
   b. Benefits received (financial and non-financial, if any)

3. How does your organisation respond to sudden, unexpected market changes or disruptive market conditions?
   a. What do you consider as sudden market changes and disruptive market conditions?
   b. How do you recognise/detect them?
   c. Processes follow to address the incidents
   d. Abilities that were supportive in responding to them
   e. Abilities that prevent successfully responding to them
   f. Have you taken any actions to avoid the occurrences of such sudden changes or disruptions in future?
   g. Benefits of those actions

4. Can you provide an overview of the social and environmental sustainability initiatives of your organisation?
   a. Types of practices
      i. Within organisation
      ii. In supply chain partner firms
   b. Processes of implementing those activities
   c. Abilities to implement those activities
   d. How do you measure social and environmental performance?

5. How does your company describe economic sustainability?

   How does your organisation measure economic sustainability?

6. How do you see the social, environmental and economic performance work together in your organisation?
   a. Relationships
   b. Trade-offs
   c. Aspects in conflicts

Appendix G Consent form for the interviewees

UniSA Research and Innovation Services

Human Research Ethics Committee

CONSENT FORM

Retention of taped materials, photographs or original works

Use this consent form when taped materials, photographs or original works are to be retained.

This project has been approved by the University of South Australia's Human Research Ethics Committee. If you have any ethical concerns about the project or questions about your rights as a participant please contact the Executive Officer of this Committee, Tel: +61 8 8302 3118; Email: Vicki.Allen@unisa.edu.au

SECTION 1: CONTACT AND PROJECT DETAILS	
Researcher's Full Name:	PATHIRAGE SAMUDI THARANGIKA PERERA
Contact Details:	+ 61 8 8302 7026, samudi.perera@mymail.unisa.edu.au
Supervisor's Full Name:	ASSOCIATE PROFESSOR CLAUDINE SOOSAY
Contact Details:	+61 8 8302 0634, Claudine.soosay@unisa.edu.au
Protocol Number:	
Project Title:	A DYNAMIC CAPABILITY APPROACH TO SUSTAINABLE SUPPLY CHAINS: AN INVESTIGATION OF AGILITY AND RESILIENCE IN THE AUSTRALIAN MANUFACTURING INDUSTRY

SECTION 2: CERTIFICATION

Participant Certification

In signing this form, I confirm that:

- I have read the Participant Information Sheet, and the nature and the purpose of the research project has been explained to me. I understand and agree to take part.
- I understand that I may not directly benefit from taking part in the project.
- I understand that I can withdraw from the study at any stage and that this will not affect my status now or in the future.
- I confirm that I am over 18 years of age.
- I understand that I will be audio-recorded during the study
- I understand that the tape(s) will be stored by the researcher securely in her office at the University of South Australia. The researcher and her supervisor only have the access to the interview data. The data will not be used for any other purposes other than for the purpose of this research.

.

Participant Signature	*Printed Name*	*Date*
Researcher's Certification		
I have explained the study to subject and consider that he/she understands what is involved.		
Researcher's Signature	*Printed Name*	*Date*

Appendix H Questionnaire



A Survey on

‘A dynamic capability approach to sustainable supply chains: an investigation of agility and resilience in the Australian manufacturing industry’

Thank you for agreeing to participate in the survey. The purpose of this research is to explore how firm agility and resilience affect environmental, social and economic sustainability. The findings from this study will provide recommendations for achieving a more sustainable supply chain with agile and resilient features.

The questions are about your supply chain practices and should take approximately 10 minutes to complete. Please answer the questions from your personal knowledge and experience. The participation is voluntary. We assure the privacy of your responses. The identity of you or your organisation will remain confidential in presenting survey results. The data will be stored securely in accordance with the UniSA Code of Conduct Policy.

As a token of appreciation for your participation, we will offer you an executive summary of the survey results.

This project has been approved by the University of South Australia's Human Research Ethics Committee. If you have any ethical concerns about the project or questions about your rights as a participant please contact the Executive Officer, Ms Vicki Allen at Tel: +61 8 8302 3118 or email: vicki.allen@unisa.edu.au.

Thank you very much for your assistance.

Yours Truly,

Samudi Perera (PhD Scholar)
Tel: +61 8 8302 0751
Email: samudi.perera@mymail.unisa.edu.au

A/ Professor Claudine Soosay (Supervisor)
Tel: +61 8 8302 0634
Email: claudine.soosay@unisa.edu.au

Dr Sukhbir Sandhu (Supervisor)
Tel: +61 8 830 20735
E-mail: Sukhbir.Sandhu@unisa.edu.au

SECTION A: COMPANY BACKGROUND

A1. Please indicate the area that best describes your primary business and your operation(s).

Accommodation and Restaurants services
Agriculture, Forestry and Fishing
Arts and Recreation
Construction
Electricity, Gas, Water and Waste Services
Health Care and Social Assistance
Information Media and Telecommunications
Manufacturing
Mining and Resources
Professional, Scientific and Technical Services
Rental, Hiring and Real Estate Services
Retail Trade
Transport, Postal and Warehousing
Wholesale Trade
Others (Please specify here) _____

A2. Which one of the following best describes your position in the supply chain of the manufacturing industry in Australia?

Input supplier (raw materials, component parts)
Manufacturer
Wholesaler
Retailer
Logistics and transport
Warehouse
Customer
Others (Please specify here) _____

If the answer to the question A2 is 'Manufacturer' please go to question A3. Otherwise go to question A4.

A3. Please indicate the sub division that best describes your primary business.

Basic Chemical and Chemical Product Manufacturing (Industrial gas, fertiliser, pharmaceutical, basic polymer, cleaning and toiletry)
Beverage and Tobacco Product Manufacturing
Fabricated Metal Product Manufacturing
Food Product Manufacturing
Furniture and Other Manufacturing
Machinery and Equipment Manufacturing
Non-Metallic Mineral Product Manufacturing (Glass, ceramic, cement, lime, plaster and concrete products)
Petroleum and Coal Product Manufacturing
Pulp, Paper and Converted Paper Product Manufacturing
Polymer Product and Rubber Product Manufacturing
Primary Metal and Metal Product Manufacturing (Basic ferrous and non-ferrous metal and metal products)
Printing (including the Reproduction of Recorded Media)
Textile, Leather, Clothing and Footwear Manufacturing
Transport Equipment Manufacturing
Wood Product Manufacturing
Others (Please specify here) _____

A4. Please indicate the categories that best represent the key suppliers (in Australia) for your organisation. (If your business has suppliers from more than one category, you can select all of them)

Agriculture and Farming
Agriculture, Forestry and Fishing Support Services
Aquaculture
Basic Chemical and Chemical Product Manufacturing (Industrial gas, fertiliser, pharmaceutical, basic polymer, cleaning and toiletry)
Basic Material Wholesaling (agricultural, mineral, metal, chemical, timber, hardware products)
Beverage and Tobacco Product Manufacturing
Coal Mining
Commission-Based Wholesaling
Fishing, Hunting and Trapping
Oil and Gas Extraction
Exploration and Other Mining Support Services
Fabricated Metal Product Manufacturing
Food Product Manufacturing
Food Retailing
Forestry and Logging
Furniture and Other Manufacturing
Fuel Retailing
Grocery, Liquor, and Tobacco Products Warehousing
Machinery and Equipment Manufacturing
Machinery and Equipment Wholesaling
Metal Ore Mining
Motor Vehicle and Motor Vehicle Parts Wholesaling
Motor Vehicle and Motor Vehicle Parts Retailing
Non-Metallic Mineral Product Manufacturing (Glass, ceramic, cement, lime, plaster and concrete products)
Non-Metallic Mineral Mining and Quarrying
Non-Store Retailing and Retail Commission-Based Buying and/or Selling
Other Store-Based Retailing (furniture, electrical and electronic goods, hardware, building and garden supplies, recreational goods, clothing, footwear and personal accessory, pharmaceutical)
Other Goods Wholesaling (textile, pharmaceutical, furniture, jewellery)
Petroleum and Coal Product Manufacturing
Textile, Leather, Clothing and Footwear Manufacturing
Polymer Product and Rubber Product Manufacturing
Primary Metal and Metal Product Manufacturing (Basic ferrous and non-ferrous metal and metal products)
Printing (including the Reproduction of Recorded Media)
Pulp, Paper and Converted Paper Product Manufacturing
Transport Equipment Manufacturing

Wood Product Manufacturing
Others (Please specify here) _____

A5. Please indicate the categories that best represent the <u>key customers</u> (in Australia) for your organisation. (If your business has customers from more than one category, you can select all of them)
Accommodation and Restaurants Services
Construction
Electricity, Gas, Water and Waste Services
Health Care and Social Assistance
Information Media and Telecommunications
Manufacturing Companies
Mining and Resources
Wholesale Trade
Professional, Scientific and Technical service
Rental, Hiring and Real Estate Services
Retail Trade
Transport, Postal and Warehousing
Others (Please specify here) _____

A6. Please indicate the number of employees in your organisation.
Less than 5
5 – 19
20 – 199
Greater than 200

A7. Please indicate the annual revenue of your organisation.

If less than AUD 2 million
0 to < $50,000
$50,000 to <$100,000
$100,000 to <$200, 000
$200,000 to <$500, 000
$500,000 to <$700, 000
$700,000 to <$1 million
$1 million to <$2 million

If above AUD 2 million
$2 million to <$5 million
$5 million to < $10 million
$10 million to <$20 million
$20 million to <$50 million
$50 million to <$100 million
$100 million to <$250 million
Greater than $250 million

A8. Please specify the principal ownership of your business.
Australian-owned
Foreign owned

A9. What is your current position in the organisation? (Please specify your answer in the space given below)

A10. How long have you been in the current position in your organisation?
Less than 1 year
Between 1 and 5 years
Between 5 and 10 years
More than 10 years

SECTION B: AGILE CHARACTERISTICS

To what extent do you agree with the following statements? Please indicate your answer on a scale of 1 to 7. If the question is not relevant to your organisation or you do not know the answer, please select number 8.

1= Strongly agree, 2= Agree, 3=Somewhat agree, 4=Neither agree nor disagree, 5=Somewhat disagree, 6=Disagree, 7=Strongly disagree, n/a=Not applicable or do not know

	Strongly agree						Strongly disagree	
Our firm can detect strategic opportunities / challenges in a timely manner (e.g., new competitor movement, new economic tendency, new technology, and new market)	1	2	3	4	5	6	7	n/a
Our firm can reconfigure supply chain resources in a flexible manner to respond to strategic opportunities / challenges	1	2	3	4	5	6	7	n/a
Our firm can detect changes in ***demand*** in a timely manner	1	2	3	4	5	6	7	n/a
Our firm can detect changes in ***supply*** in a timely manner	1	2	3	4	5	6	7	n/a
Our firm can reconfigure supply chain resources in a ***flexible manner*** to respond to changes in ***demand***	1	2	3	4	5	6	7	n/a
Our firm ***cannot*** reconfigure supply chain resources in a ***flexible manner*** to respond to changes in ***supply***	1	2	3	4	5	6	7	n/a
Our firm can reconfigure supply chain resources ***quickly*** to respond to changes in ***supply***	1	2	3	4	5	6	7	n/a
Our firm can reconfigure supply chain resources ***quickly*** to respond to changes in ***demand***	1	2	3	4	5	6	7	n/a
Our firm uses various sources of information to keep abreast with operational changes (e.g., changes in demand, supply, production etc.)	1	2	3	4	5	6	7	n/a

SECTION C: RESILIENT CHARACTERISTICS

To what extent do you agree with the following statements? Please indicate your answer on a scale of 1 to 7. If the question is not relevant to your organisation or you do not know the answer, please select number 8.

1= Strongly agree, 2= Agree, 3=Somewhat agree, 4=Neither agree nor disagree, 5=Somewhat disagree, 6=Disagree, 7=Strongly disagree, n/a=Not applicable or do not know

	Strongly agree						Strongly disagree	
Our firm is able to respond to unexpected changes in the business environment (e.g., demand, supply, environmental changes such as natural disasters, economic crises etc.)	1	2	3	4	5	6	7	n/a
Our firm can return to its original or better state after being disturbed by sudden changes	1	2	3	4	5	6	7	n/a
Our firm can maintain a desired level of control over structure and functions of the organisation during the sudden changes in the supply chain	1	2	3	4	5	6	7	n/a
Our firm has the ability to learn from the unexpected events in the supply chain	1	2	3	4	5	6	7	n/a
Our firm ***cannot*** adapt to sudden changes in the supply chain easily	1	2	3	4	5	6	7	n/a
Our firm can maintain high situational awareness at all times of current and long-term changes in markets	1	2	3	4	5	6	7	n/a
Our firm collaborates with supply chain partner firms in responding to changes in markets	1	2	3	4	5	6	7	n/a
Our firm takes actions to minimise the causes leading to unexpected changes in markets	1	2	3	4	5	6	7	n/a

SECTION D: SOCIAL SUSTAINABILITY

To what extent do you agree with the following statements? Please indicate your answer on a scale of 1 to 7. If the question is not relevant to your organisation or you do not know the answer, please select number 8.

1= Strongly agree, 2= Agree, 3=Somewhat agree, 4=Neither agree nor disagree, 5=Somewhat disagree, 6=Disagree, 7=Strongly disagree, n/a=Not applicable or do not know

	Strongly agree						Strongly disagree	
Our firm takes actions to improve the occupational health and safety of our employees	1	2	3	4	5	6	7	n/a
Our firm takes actions to develop employee skills	1	2	3	4	5	6	7	n/a
Our firm considers the social sustainability of ***suppliers*** in business	1	2	3	4	5	6	7	n/a
Our firm considers the social sustainability of ***customers*** in business	1	2	3	4	5	6	7	n/a
Our firm practices ethical business conduct in our business transactions	1	2	3	4	5	6	7	n/a
Our firm ***does not*** support the welfare and betterment of suppliers	1	2	3	4	5	6	7	n/a
Our firm supports the welfare and betterment of the wider community	1	2	3	4	5	6	7	n/a
Our firm ensures the rights of the employees	1	2	3	4	5	6	7	n/a

SECTION E: ENVIRONMENTAL SUSTAINABILITY

To what extent do you agree with the following statements? Please indicate your answer on a scale of 1 to 7. If the question is not relevant to your organisation or you do not know the answer, please select number 8.

1= Strongly agree, 2= Agree, 3=Somewhat agree, 4=Neither agree nor disagree, 5=Somewhat disagree, 6=Disagree, 7=Strongly disagree, n/a=Not applicable or do not know

	Strongly agree						Strongly disagree	
Our firm makes efforts in reducing pollution, waste and hazardous materials	1	2	3	4	5	6	7	n/a
Our firm designs environmentally friendly business solutions	1	2	3	4	5	6	7	n/a
Our firm ***does not*** select ***suppliers*** based on environmental criteria	1	2	3	4	5	6	7	n/a
Our firm selects ***customers*** based on environmental criteria	1	2	3	4	5	6	7	n/a
Our firm implements environmental management systems	1	2	3	4	5	6	7	n/a
Our firm engages in recycling activities	1	2	3	4	5	6	7	n/a
Our firm cooperates with ***suppliers*** in environmental activities	1	2	3	4	5	6	7	n/a
Our firm cooperates with ***customers*** in environmental activities	1	2	3	4	5	6	7	n/a

SECTION F: ECONOMIC SUSTAINABILITY

To what extent do you agree with the following statements? Please indicate your answer on a scale of 1 to 7. If the question is not relevant to your organisation or you do not know the answer, please select number 8.

1= Strongly agree, 2= Agree, 3=Somewhat agree, 4=Neither agree nor disagree, 5=Somewhat disagree, 6=Disagree, 7=Strongly disagree, n/a=Not applicable or do not know

	Strongly agree						Strongly disagree	
Our firm has entered new markets over the past 3 years	1	2	3	4	5	6	7	n/a
Our firm is able to charge premium prices on products/services	1	2	3	4	5	6	7	n/a
Our firm has achieved higher profit margins compared to competitors	1	2	3	4	5	6	7	n/a
Our firm has increased sales over the past 3 years	1	2	3	4	5	6	7	n/a
Our firm ***has not*** increased market share over the past 3 years	1	2	3	4	5	6	7	n/a
Our firm has improved return on investment over the past 3 years	1	2	3	4	5	6	7	n/a

If you would like a copy of a summary report of the findings, please email the researcher at samudi.perera@mymail.unisa.edu.au.

Thank you for your time and cooperation

Appendix I Coding framework

Descriptive codes: Industry
Firm size
Ownership

Topic and analytic codes for each variable of interest are shown in the following table.

Analytic codes are shaded in colour. Sub-codes are indented under the main code.

Variable	Code
Agility	Adjust operations for future expected market changes
	Adjust operations according to demand changes
	Adjust operations according to market changes
	Adjust to supply side changes
	Alter changes in suppliers
	Proactively respond to market changes
	Benefits of responding to changes
	Building flexibility is important to respond to changes
	Capture opportunities arisen from market changes
	Changes in supply side
	Closely monitoring suppliers
	Communication with customers
	Communication with suppliers
	Communication within the company
	Develop networks of contacts in the industry is important to receive market information
	Identify market changes
	Information received
	Type of information
	Receive information about customer demand
	Receive information about markets
	Receive information about supply changes
	Information channels
	Information received from customers
	Information received from suppliers
	Integrated IT systems to share information
	Manufacturing flexibility
	Quickly respond to customer requirement is important
	Relationships with customers
	Relationships with suppliers

Continued on next page

Variable	Code
	Respond to demand
	Respond to market changes
	Respond to changes in supply
	Some of the responses to market changes are long term
	Supply is in line with company requirements
	Supply is in line with the demand changes
Resilience	Abilities to respond to unexpected changes happening in the market
	Get support from others to overcome problems arising from sudden changes
	Receiving information about the incident quickly through the networks to proactively respond
	Receiving information about unexpected sudden changes
	Receiving information about the future expected changes
	Relationships among supply chain partners help to overcome problems
	Actions that were taken to avoid the occurrences of sudden market changes
	Validate suppliers for quality and reliability
	Eliminate the causes of the problem
	Actions that were taken to minimise the impact of sudden changes
	Having contingency plans
	Having excess resources
	Improve robustness
	Control over supply chain during disruptions
	Learning from past events
	Impact of sudden changes cannot always be prevented
	Possibility of disrupting future operations due to violations of sustainability aspects by supply chain partners
	Reasons for sudden unexpected changes in the supply chain
	Receiving information quickly is important to respond to sudden changes
	Respond to unexpected sudden changes
	Sudden changes are disruptive
	Sudden changes are part of the business
Social sustainability	Act for social wellbeing of the community
	Ensure product safety
	Happy people lead to commercial prosperity
	Managing social sustainability in the supply chain
	Audit customers to ensure safety applications at their sites
	Help suppliers to implement social sustainable practices
	Supplier visits to ensure social sustainability
	Social activities do not directly enhance economic performance
	Social activities improve employee moral
	Social aspect is a major concern of the business
	Social sustainability is an important criterion in business transactions
	Social sustainability is important for business success

Continued on next page

Variable	Code
	Social sustainability measures
	Social sustainability practices within the company
	Activities that ensure health and safety
	Employee skills development activities
	Equal treatment of employees
	Social events
	Practice of business ethics
	Suppliers are socially sustainable
	The reasons to implement socially sustainable practices
	To be good corporate citizens
	To comply with regulations
	To retain employees
Environmental sustainability	Demand for environmental sustainability
	Environmental activities
	Environmental friendly designs
	Environmental friendly purchasing
	Reduce water consumption
	Energy saving activities
	Pollution reduction
	Recycling
	Reuse
	Environmental sustainability improve financial performance
	Environmental sustainability is built into processes
	Environmental sustainability leads to business success
	Environmental sustainability measures
	Managing environmental sustainability in the supply chain
	Environmental sustainability is a main criterion in business engagements
	Influence supply chain partners to implement environmental practices
	Help suppliers to implement environmental practices
	Help customer firms to implement environmental practices
	Environmental management system
	Suppliers are environmentally sustainable
	The decision to invest in environmental activities is influenced by financial implications
	The need to implement environmental activities
	Environmental activities are regulatory requirements
	To be good corporate citizens
Economic sustainability	Economic measures
	Economic performance is important to attain social and environmental sustainability
Sustainability trade-off	Relationship between social, environmental and economic sustainability
	Trade-off in sustainability aspects

Appendix J Sample of the inter-rater reliability test results

Node	Source	Source Fo	Source Si	Kappa	Agreeme	A and B (%)	Not A and N	Disagreem	A and Not	B and Not
Abilities to respond to unexpected changes happening in the m	Firm 11	Internals	28401 ch	1	100	0	100	0	0	0
Abilities to respond to unexpected changes happening in the m	Firm 14	Internals	23460 ch	1	100	0	100	0	0	0
Abilities to respond to unexpected changes happening in the m	Firm 19	Internals	10558 ch	1	100	0	100	0	0	0
Abilities to respond to unexpected changes happening in the m	Firm 20	Internals	23891 ch	1	100	0	100	0	0	0
Abilities to respond to unexpected changes happening in the m	Firm 23	Internals	15375 ch	1	100	0	100	0	0	0
Abilities to respond to unexpected changes happening in the m	Firm 26	Internals	12800 ch	1	100	0	100	0	0	0
Abilities to respond to unexpected changes happening in the m	Firm 27	Internals	24015 ch	1	100	0	100	0	0	0
Abilities to respond to unexpected changes happening in the m	Firm 5	Internals	28191 ch	1	100	0	100	0	0	0
Abilities to respond to unexpected changes happening in the m	Firm 6	Internals	31878 ch	1	100	0	100	0	0	0
Abilities to respond to unexpected changes happening in the m	Firm 10	Internals	37289 ch	1	100	0	100	0	0	0
Abilities to respond to unexpected changes happening in the m	Firm 11	Internals	28518 ch	0	98.36	0	98.36	1.64	0	1.64
Abilities to respond to unexpected changes happening in the m	Firm 14	Internals	23579 ch	1	100	0	100	0	0	0
Abilities to respond to unexpected changes happening in the m	Firm 19	Internals	10683 ch	1	100	0	100	0	0	0
Abilities to respond to unexpected changes happening in the m	Firm 20	Internals	24021 ch	1	100	0	100	0	0	0
Abilities to respond to unexpected changes happening in the m	Firm 23	Internals	15461 ch	1	100	0	100	0	0	0
Abilities to respond to unexpected changes happening in the m	Firm 27	Internals	24149 ch	1	100	0	100	0	0	0
Abilities to respond to unexpected changes happening in the m	Firm 5	Internals	28408 ch	1	100	0	100	0	0	0
Abilities to respond to unexpected changes happening in the m	Firm 6	Internals	31968 ch	1	100	0	100	0	0	0
Abilities to respond to unexpected changes happening in the m	Firm26	Internals	12923 ch	1	100	0	100	0	0	0
Abilities to respond to unexpected changes happening in the m	Firm 10	Internals	37160 ch	1	100	0	100	0	0	0

Coding Comparison Query Res

Node	Source	Source Fol	Source Siz	Kappa	Agreeme	A and B (%)	Not A and No	Disagreeme	A and Not	B and Not
Ensure product safety	Firm 10	Internals\	37289 ch	1	100	0	100	0	0	0
Ensure product safety	Firm 11	Internals\	28518 ch	1	100	0	100	0	0	0
Ensure product safety	Firm 14	Internals\	23579 ch	1	100	0	100	0	0	0
Ensure product safety	Firm 19	Internals\	10683 ch	1	100	0	100	0	0	0
Ensure product safety	Firm 20	Internals\	24021 ch	0	98.53	0	98.53	1.47	0	1.47
Ensure product safety	Firm 23	Internals\	15461 ch	0	97.95	0	97.95	2.05	0	2.05
Ensure product safety	Firm 27	Internals\	24149 ch	1	100	0	100	0	0	0
Ensure product safety	Firm 5	Internals\	28408 ch	1	100	0	100	0	0	0
Ensure product safety	Firm 6	Internals\	31968 ch	1	100	0	100	0	0	0
Ensure product safety	Firm26	Internals\	12923 ch	1	100	0	100	0	0	0
Envioronemental sustainability improve financial performanc	Firm 10	Internals	37160 ch	1	100	0	100	0	0	0
Envioronemental sustainability improve financial performanc	Firm 11	Internals	28401 ch	1	100	0	100	0	0	0
Envioronemental sustainability improve financial performanc	Firm 14	Internals	23460 ch	1	100	0	100	0	0	0
Envioronemental sustainability improve financial performanc	Firm 19	Internals	10558 ch	1	100	0	100	0	0	0
Envioronemental sustainability improve financial performanc	Firm 20	Internals	23891 ch	1	100	0	100	0	0	0
Envioronemental sustainability improve financial performanc	Firm 23	Internals	15375 ch	1	100	0	100	0	0	0
Envioronemental sustainability improve financial performanc	Firm 26	Internals	12800 ch	1	100	0	100	0	0	0
Envioronemental sustainability improve financial performanc	Firm 27	Internals	24015 ch	1	100	0	100	0	0	0
Envioronemental sustainability improve financial performanc	Firm 5	Internals	28191 ch	1	100	0	100	0	0	0
Envioronemental sustainability improve financial performanc	Firm 6	Internals	31878 ch	1	100	0	100	0	0	0

Appendix K Description of the sample of the firms interviewed

Firm 1 – exports high-quality seafood to other countries. It is a subsidiary of a large group operating in Australia.

Firm 2 – is a South Australian-based contract food manufacturer. It manufactures long-life liquid cheese, dairy and tomato-based sauces. As a small business, it grew to be a leading food manufacturer servicing industrial producers, fast food restaurants, food services and contract packing. It retails in Australia and also exports to other countries.

Firm 3 – is an Australian-owned partnership focusing on the milling and refining of sugar. Its headquarters are located in New South Wales.

Firm 4 – is a family-owned firm. It processes vegetables, meat and seafood for supermarkets in the form of chilled, frozen and shelf-stable food. The firm expanded in 1995 acquiring major food brands and currently offers more than 1500 food products to the Australian market.

Firm 5 – is one of Australia's largest meat processing firms based in South Australia, with four factories in South Australia, New South Wales and Queensland. The majority of its products are exported to 80 countries globally.

Firm 6 – specialises in manufacturing cordials, juices and syrups. The operation is based in South Australia.

Firm 7 – manufactures dairy products, beverages, beer, spirits and wines. The firm operates in Australia and New Zealand. The beer products are exported to Asia, America, Europe, Middle East and South Pacific markets.

Firm 8 – designs sustainable clothing, footwear, shoes and accessories. Most of the products are handmade and handcrafted. The manufacturing operation is based in South Australia. The firm exports to 15 countries worldwide.

Firm 9 – is a small-sized leading manufacturer of timber products based in South Australia. The firm produces pallets, bins, boxes and crates, and serves other storage and transport needs.

Firm 10 – manufactures value-added paperboard packaging products. Based in Victoria, the firm supplies products to a variety of industries such as pharmaceutical and healthcare, personal care, cosmetics and fragrances, confectionery, beverages, wine, food, fast-moving consumer goods, multimedia and technology. The firm currently has three plants in Australian and New Zealand.

Firm 11 – operates in the printing support services sector. It provides products, technical services, finance, training, and advisory services to customers in printing, paper making and packaging industries in Australia and New Zealand.

Firm 12 – is in oil and gas extraction and production. The firm's operations include exploring, producing, refining, transporting, and selling petroleum, lubricant products, sealants and waxes.

Firm 13 – supplies compressed and bulk gases, chemicals and equipment worldwide. These include on-site gases, bulk and liquefied gases, workplace safety protection products, scientific, welding and laser gas equipment, respiratory and sleep apnoea products.

Firm 14 – operates in basic chemical and chemical product manufacturing. It mainly engages in importing, manufacturing, marketing and distribution of cleaning, sanitation and water treatment products and pest elimination services.

Firm 15 – manufactures and distributes fertilisers, explosives and chemicals. Headquartered in Victoria, the firm serves customers around the world.

Firm 16 – manufactures specialty chemicals and materials such as adhesives, sealants, resins, curing agents, ceramics, silicone-based products, plastic additives and other general purpose chemicals for the industrial and consumer markets.

Firm 17 – is a New Zealand-based firm that deals with synthetic resin and synthetic rubber manufacturing in Australia. The products include paint, printing ink, adhesives, textile, construction, paper and composites industries. The firm has facilities across Europe, Asia, Australia, New Zealand and North America.

Firm 18 – is a plastic-moulding manufacturer producing a wide range of polymer-based products. The firm utilises both blow moulding and injection moulding techniques. The manufacturing is based in South Australia.

Firm 19 – designs and manufactures plastic and steel packaging and associated products. It operates in New Zealand, China, Singapore, Thailand and the Philippines. The firm mainly serves the food, dairy, beverage, chemical, agricultural and industrial markets.

Firm 20 – offers building products for residential and commercial construction. The products include plasterboard, fibre cements, bricks and pavers, concrete panels, walling solutions, roof tiles and glass.

Firm 21 – manufactures a range of fibre cement products for residential housing and commercial and industrial construction industries.

Firm 22 – manufactures food cans for the food and beverage industries. It is a subsidiary of a European firm that leads in glass and metal packaging solutions. In Australia, the manufacturing plants are located in Victoria and Queensland.

Firm 23 – manufactures prefabricated metal-based equipment to improve manufacturing processes. The firm is involved in project-type manufacturing.

Firm 24 – manufactures trains, rail transportation systems, controlling and signalling systems, and light rail vehicles. It is a subsidiary of a multinational firm headquartered in North America.

Firm 25 – manufactures motor vehicles and parts. It manufactures three vehicle models in Australia and imports others. It owns only two dealerships itself; other dealerships are owned by independent parties. The firm expanded the Australian business into export markets such as New Zealand, Middle East and South Pacific Islands in 1986. Due to the challenges confronting the automotive manufacturers in this country, the

firm has decided to cease manufacturing in Australia by the end of 2017 and to transform to a national sales and distribution firm.

Firm 26 – manufactures motor vehicles and a wide range of motor vehicle parts. It specialises in driveline and chassis technology.

Firm 27 – manufactures machinery and equipment for mining, transport, general industrial and contract manufacturing industries. Headquartered in New South Wales, the firm has subsidiaries in Malaysia, China, USA, Canada and UK.

Firm 28 – is in the medical and surgical equipment manufacturing industry producing mainly hearing devices.

Firm 29 – manufactures communication equipment in Australia, Canada, the USA, UK, Ireland, China and the UAE. It operates under three divisions: communication products, metal detection and mining technology solutions. Products are sold worldwide to 150 countries.

Firm 30 – manufactures electrical cables and wires. In addition, the firm offers value-added services to customers including technical services and cable design.

Firm 31 – operates in the measurement and other scientific equipment manufacturing in Australia. The firm provides innovative technologies in analytical instruments, laboratory products and services, and specialty diagnosis and life sciences solutions for customers in research, clinical and applied markets.